Windows-based EPROM programmer

SILICON CHIP

NOVEMBER 2002
$6.60* INC GST NZ$7.50 INC GST
ISSN 1030-2662
PRINT POST APPROVED - PP255003/01272
siliconchip.com.au

PROJECTS TO BUILD - SERVICING - COMPUTERS - VINTAGE RADIO - AUTO ELECTRONICS

Getting into Wi Fi

...ding your own Wi-Fi Equipment

PLUS: NiCad "Supercharger!"

MAKING 3D MOVIES WITH YOUR OWN CAMCORDER!

PSST! WANT A FREE* Electronics TestBench?

...a "MUST HAVE" in your library

Subscribe to SILICON CHIP and we'll give you a copy, of "Electronics TestBench", just to say "thanks"!*

(*Offer applies to Australia only)

We value your support. In fact, we cannot exist without it. That's why we want to say "thanks" with our gift to you. Subscribing to Australia's only electronics magazine will also save you money, you'll get it earlier than it appears on the news-stands, you get a 10% discount on any other SILICON CHIP merchandise (books etc) . . . and your support is vital to ensure your magazine remains strong.

Please Note: Electronics TestBench can also be purchased separately.
Overseas subscribers: please refer to www.siliconchip.com.au for subscription rates

SUBSCRIPTION RATES:

(Including GST)	1 Year	2 Years
	$69.00	$135.00
With binders	$83.00	$159.00

(*Special offer valid for Australia only)

MONTH TO START YOUR SUBSCRIPTION?

.....

YES! I want to become a SILICON CHIP subscriber for ❑ 1yr ❑ 2 Yr ❑ With Binder(s)

Your name: .....

Your address: .....

Town/Suburb: ..... State ..... Postcode .....

Daytime telephone number: (.....) ..... Email address: .....

Payment by: ❑ Cheque Enclosed OR ❑ bankcard ❑ VISA ❑ MasterCard

Card No: |_|_|_|_|_|_|_|_|_|_|_|_|_|_|_|_| Expiry: |_|_|-|_|_|

Signature: .....

Please copy form if you don't want to cut your magazine

SILICON CHIP PUBLICATIONS
MAIL ORDERS: PO Box 139 Collaroy NSW 2097

Phone orders: (02) 9979 5644 (9-5, Mon-Fri)
Fax orders: (02) 9979 6503 (24 hrs, 7 days)
Email orders: silchip@siliconchip.com.au (24 hrs, 7 days)

Contents

Vol.15, No.11; November 2002

SILICON CHIP

www.siliconchip.com.au

FEATURES

4 The Most Complex Car In The World
It's DaimlerChrysler's "Maybach" and it's packed full of electronics to give every function imaginable – by Julian Edgar

11 Canon's EOS-1Ds 11.1 Megapixel Camera
And we thought 6 megapixels was big news!

12 3D Movies On Your Own Camcorder
Want to shoot your own 3D movies? No problem; just fit this special adaptor to your camcoder – by Barrie Smith

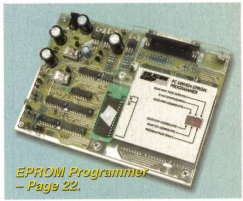

EPROM Programmer – Page 22.

PROJECTS TO BUILD

22 A Windows-Based EPROM Programmer
This new design can read and program virtually all commonly-used EPROMs and OTPs – by Jim Rowe

56 SuperCharger For NiCd & NiMH Batteries
Build this advanced unit to fast-charge the new-generation super-capacity NiCd & NiMH batteries – by Peter Smith

66 Wi-Fi: 21st Century Cat's Whiskers
The new amateur radio? – wireless networking for everybody. And we show you how to build your own antennas – by Stan Swan

76 4-Digit Crystal-Controlled Timing Module
Just change the chip to build a stopwatch, a photographic timer, a frequency meter or a programmable down timer – by Frank Crivelli & Peter Crowcroft

SuperCharger For NiCd & NiMH batteries – Page 56.

SPECIAL COLUMNS

34 Serviceman's Log
The love job that bounced – by the TV Serviceman

72 Circuit Notebook
(1) Speaker Headphone Switch For PCs; (2) Simple Cat.5 Network Tester; (3) Using AC For LED Christmas Lights; (4) DC Motor Speed Controller; (5) Short Circuit Protection For Balanced Supply Rails; (6) Tablet Reminder Uses A Watch Module.

82 Vintage Radio
The AWA 532MF 32V Table Receiver – by Rodney Champness

COMPUTERS

38 Using Linux To Share An Optus Cable Modem; Pt.1
First article shows you how to get the cable modem working – John Bagster

DEPARTMENTS

2 Publisher's Letter
8 Mailbag
31 Silicon Chip Weblink
53 Product Showcase
88 Ask Silicon Chip
91 Notes & Errata
94 Market Centre
96 Advertising Index

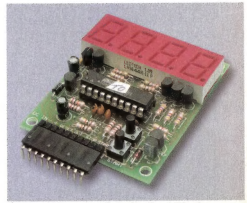

4-Digit Crystal Controlled Timing Module – Page 76.

SILICON CHIP

www.siliconchip.com.au

Publisher & Editor-in-Chief
Leo Simpson, B.Bus., FAICD

Production Manager
Greg Swain, B.Sc.(Hons.)

Technical Staff
John Clarke, B.E.(Elec.)
Peter Smith
Ross Tester
Jim Rowe, B.A., B.Sc, VK2ZLO
Rick Walters

Reader Services
Ann Jenkinson

Advertising Enquiries
Leo Simpson
Phone (02) 9979 5644
Fax (02) 9979 6503

Regular Contributors
Brendan Akhurst
Rodney Champness, VK3UG
Julian Edgar, Dip.T.(Sec.), B.Ed
Mike Sheriff, B.Sc, VK2YFK
Philip Watson, MIREE, VK2ZPW
Bob Young

SILICON CHIP is published 12 times a year by Silicon Chip Publications Pty Ltd. ACN 003 205 490. ABN 49 003 205 490 All material copyright ©. No part of this publication may be reproduced without the written consent of the publisher.

Printing: Hannanprint, Noble Park, Victoria.

Distribution: Network Distribution Company.

Subscription rates: $69.50 per year in Australia. For overseas rates, see the subscription page in this issue.

Editorial & advertising offices:
Unit 8, 101 Darley St,
Mona Vale, NSW 2103.
Postal address: PO Box 139,
Collaroy Beach, NSW 2097.
Phone (02) 9979 5644.
Fax (02) 9979 6503.
E-mail: silchip@siliconchip.com.au

ISSN 1030-2662

* Recommended and maximum price only.

PUBLISHER'S LETTER

Hifi equipment can be a big delusion

One of our greatest pleasures in producing SILICON CHIP magazine is the great feedback we sometimes get from readers. It doesn't happen all that often but when an enthusiastic reader does make contact, it can be a real buzz. On the other side of the coin, some electronics constructors are really keen to push circuits or designs that they have built and we are certainly not keen to disillusion them. Sometimes though, it has to be done.

We had one case recently where a keen reader was very impressed with a class-A amplifier which he had built from an overseas publication. Being so sure of its worth, he wanted us to test and measure it. He was very persistent. Since he was an employee of one of our clients, I reluctantly agreed. As soon as I saw it, I knew that the performance results were certain to be bad. I didn't know how bad but I knew he was going to be disappointed.

Don't get me wrong. He had done a very good job with its construction. It was housed in a 2-unit high rack case, used a big toroid power transformer and had lots of capacitance – certainly enough to ensure 10 watts class A operation per channel. But when I asked him about the circuit and he sketched it out, I knew it was going to be even worse. In essence, it just used two power Mosfets, one set up as a constant current source for the other which operated as a simple common-source amplifier and with no feedback. And to make things even worse, the internal speaker wiring was run in Cat-5 cable (ie, single strand telephone wire).

I told him this was bad practice but he still wanted measurements done. Ergo, I did them. And they weren't pretty. Frequency response was OK, about 1.5dB down at 20kHz and signal-to-noise ratio was around -90dB – pretty good really. But distortion and power output? It was really only good for about 4 watts per channel into 8-ohm loads and at that level, the distortion was 10%, right across the band from 20Hz to 20kHz. This was from an amplifier which would have cost many hundreds of dollars to build!

Even at low power, less than 200 milliwatts, distortion was 1% and it rose to 20% (yes, 20%) at just under 6 watts. Umm, what to tell him? Well, I could report that it was amazingly consistent in both channels.

Worse still, the output impedance of the amplifier was really high, as you would expect with single strand telephone wire. How high would you expect? Try 3.5Ω. And even measured right at the amplifier modules terminals it was still 3.3Ω. The result is a gutless amplifier with boomy bass, due to the poor damping factor.

But really, if you build such a simple amplifier with absolutely no feedback, the results are always going to be poor. And I can see some readers nodding to themselves but saying that their favourite amplifier is different – it sounds great. Well, dream on. You are bound to be deluded. As one of the staff members here stated, "No parent has an ugly child!"

The message is quite simple. If you build or buy an amplifier for which there are no published distortion figures, you will almost certainly get a load of rubbish. It might cost quite a lot of money but it will still be a load of rubbish.

And what about the poor builder of this amplifier? How did he feel? I don't know. At the time of writing this I still had not told him and I am not looking forward to it.

Leo Simpson

"You need what?"

POS Scanners

Cat 8866-7 A laser scanner which performs, with a price you won't believe! Looks like a CCD scanner **$329**

Cat 8867-7 Laser scanner which really looks the part, but at a CCD price! **$399**

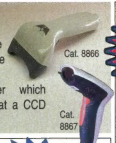

Foreign Language Keyboards

ALL JUST $69 EACH

Cat 8989-7 Chinese/US

Cat 8991-7 UK English • **Cat 8992-7** Italian

Cat 8994-7 French • **Cat 8995-7** Greek

Cat 8996-7 Czech • **Cat 8993-7** German

Make the most of existing PCI Slots

FireWire USB 2.0 PCI Card, 4 x USB & 3 x FireWire

Cat 2877-7 $179

Need a custom cable, connector or special PCB for serial or industrial I/O cards?

Call us for a quote - 02 4389 8444

Magnetic Card Readers

Loyalty Programs-We Have all the answers!

Cat 8768-7 Very Compact PS/2 K/B Wedge. Tracks 1 and 2 **$259**

Cat 8203-7 Compact, Serial Interface Tracks 1 and 2 **$259**

Cat 8681-7 Trk 2 K/b Wedge (Also available in Dark Grey-Part no1008011-7) **$219**

Cat 8418-7 Trk 2 Serial, Bi-Directional. Ideal for credit card terminals as on-line reader **$239**

Cat 8218-7 Trk 2 & 3 AT K/B Wedge **$259**

Cat 8968-7 Track 2 K/b Wedge - Programmable **$259**

Cat 1008001-7 Trk 2 Programmable USB **$299**

Cat 8947-7 Reader/Writer for High Coercivity Cards 3 Trk Serial **$3299**

Cat 8901-7 Smart Card/Mag card Reader Combo **$916**

Cat 8046-7 Reader/Writer for all 3 tracks, serial connection **$1799**

Cat 1008035-7 Tracks 1 & 2. Programmable - extract only the info you need. USB. **$329**

External I/R Links

Cat 8518-7 Infra Red link, Motherboard connection **$75**

Cat 8421-7 Infra Red link, Serial Connection **$89**

Bluetooth is here!

Here's just some of our extensive range of Bluetooth accessories.

Bluetooth USB Adapter Transfer names, phone numbers and appointments between your Notebook/PC and your PDA or mobile with Bluetooth wireless connectivity

Cat 11901-7 $149

Bluetooth Compact Flash Card Give your Windows CE-based pocket PC (with a CF card slot) Bluetooth connectivity

Cat 11902-7 $199

Bluetooth USB Home LAN

A home network without wires. It just needs a USB port

Cat 11903-7 Single Dongle **$199**

Cat 11904-7 2 Dongle Kit **$349**

PALM Bluetooth SD Card for m505 etc. Provides a Bluetooth connection between your Palm and Bluetooth enabled phones, PC's etc

Cat 18107-7 $359

Video Modem

Operate a video/surveillance camera on a single cable. Includes both send and receive units and a variable voltage power supply **Cat 3502-7 $399**

Digital Data Box

This stand alone unit copies your Compact Flash information, pictures, etc, straight to an integrated hard drive; USB connectivity lets you download to your PC **Cat 3500-7 $499**

Internet Router for ADSL/Cable

Provides a convenient and secure window to the Internet for home/office LAN **Cat 10134-7 $359**

Video/VGA Converter

A really spacy looking converter, from video/Play Station, etc to VGA. View your games on a high resolution monitor **Cat 3497-7 $279**

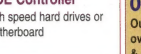

Ultra DMA133 PCI IDE Controller

Take advantage of the high speed hard drives or just speed up your old motherboard

Cat 2876-7 $89

Surveillance Cameras

Wireless and IP addressable

This quality camera can be installed like any other node on either a wireless or conventional Ethernet installation **Cat 3475-7 $1559**

IP Addressable Camera

Plug into the nearest Ethernet hub or PC. Ideal for small security installations **Cat 3487-7 $669**

External Hard Drive Cases

Now in Brushed aluminium.

Cat 6710-7 For 2.5" Hard Drive. USB 2.0 **$129**

Cat 6711-7 For 3.5" Hard Drive. USB 2.0 **$159**

Cat 6689-7 For 5.25" Drive USB 2.0. **$199**

Cat 6659-7 For 2.5" Hard Drive FireWire **$169**

Cat 6633-7 For 3.5" Hard Drive FireWire **$219**

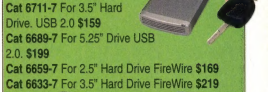

Tired of PC/Workstation upgrade costs?

Try these Terminal solutions! We even have a Linux LTSP unit available.

Cat 1214-7 Windows environment with RDP and ICA **$1039**

These two products replace Wyse and Dec terminals -

Cat 1133-7 Serial **$549**

Cat 1134-7 Ethernet **$579**

Cat 1232-7 Windows environment plus Internet Explorer **$1399**

Cat 1144-7 Linux PXE Terml **$829**

Easy Transfer Board - Universal Front Access Bay

Utilises a 3.5in bay to provide front access for 2 x USB, 1 x Firewire, 1 x Audio in, 1 x Audio out and 1 x Serial ports. Cable included

Cat 2857-7 $89

High Power USB Adapter

Allows the use of "heavy-drain" appliances such as barcode scanners on your USB port.

Cat 15124-7 $195

Overnight delivery

Our couriers typically deliver overnight to all capital cities & major regional centres in Australia providing orders are received by phone, fax or email before 4.30pm EST

Australia wide express courier $15 (3kg max)

Dealer Enquiries Welcome!

MicroGram Computers

www.mgram.com.au

Vamtest Pty Ltd trading as **MicroGram Computers** ABN 60 003 062 100, Unit 1, 14 Bon Mace Close, Berkeley Vale NSW 2261

Phone: (02) 4389 8444 **FreeFax: 1 800 625 777** **sales@mgram.com.au** **info@mgram.com.au**

All prices subject to change without notice. Pictures are for illustrative purposes only.

The Most Complex Car

. . . packed full of electronics in a way never before seen

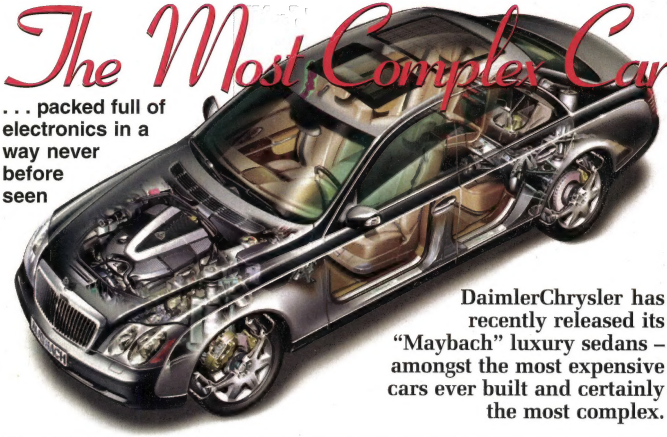

DaimlerChrysler has recently released its "Maybach" luxury sedans – amongst the most expensive cars ever built and certainly the most complex.

The cars are simply jammed with electronics – there is barely a function or component that isn't either electronic or controlled electronically. In fact, there are no less than 76 electronic control units in the car! Let's have a quick look at some of the highlights.

To suggest that the rear compartment is luxurious is something of an understatement. Seated behind a glass partition that can vary in transparency via a sandwiched liquid crystal membrane (a glass sunroof uses the same technology), passengers can electrically adjust the fore-aft movement and backrest angle, with the latter able to be reclined to 47°. A memory facility allows these settings to be recalled.

In addition, the seats contain a pneumatic lumbar massage function, whereby an internal bag is alternately filled and relieved of air.

If the buyer requests, the rear seats can also be equipped with active ventilation: eight fans can be adjusted in three stages to waft air through the seat perforations. Not including the optional fans, each rear seat contains seven electric motors, complete with their own electronic control unit.

Part of the programming of the system involved ensuring that the occupant's body was always fully supported while movement was taking place.

Between the rear seats is the entertainment console. This includes a DVD player, radio (includes VHF reception), TV tuner, 6-disc CD changer, two telephone systems, a refrigerator compartment with its own electric compressor – oh yes, and a system that holds in place a champagne bottle and fine sterling silver goblets (they're not electronic but we just thought you'd like to know about them!).

The centre rear console also contains controls for the

. in the World

by Julian Edgar

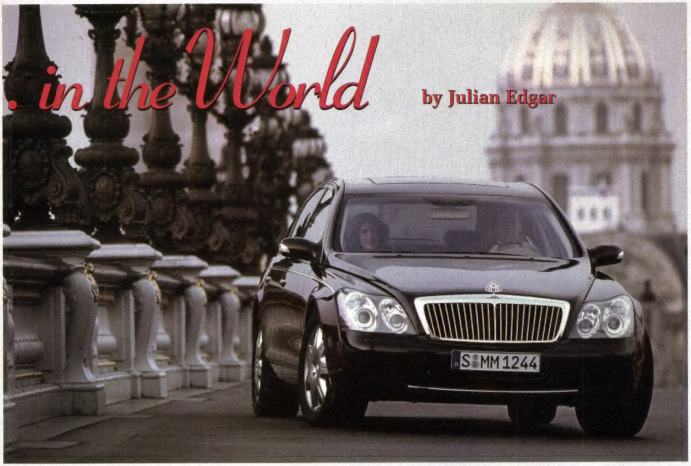

central locking, the TELEAID system through which help can be gained in an emergency (more on this below), intercom system and sockets for connecting a camcorder, MP3 player or video games.

Home theatre in the car

In the rear of each front seat is mounted a 9.5-inch TFT flat screen. Displayed on the screens can be the TV program (PAL, SECAM and NTSC can all be received), the output of the DVD player or various car system controls. As passengers are watching the movie, they can enjoy the Dolby digital surround sound effects through the Bose sound system.

The system has a total audio output of 600 watts and uses no less than 21 speakers. A sound processor is equipped with an interior microphone to detect any changes within the cabin (eg, a variation in the number of occupants) and it adjusts the output to suit.

The driver and front passenger are provided with a centrally-mounted 6.5-inch colour TFT screen. SMS, WAP and email can all be accessed with this display.

However, DVD and TV reception is not available on the front screen once the vehicle's speed exceeds 8km/h. The front screen also displays the navigation system output.

The DVD-based system includes the entire European road network, in addition to information on the locations of petrol stations, railway stations, airports, hotels and restaurants. A dynamic route guidance facility takes into account information received via the Traffic Message Channel of the Radio Data System. This traffic message system is available in Germany and the Netherlands.

Climate control air-conditioning

The climate control system of the car uses two complete systems. In addition to temperature, it also automatically takes into account the intensity of the sunshine, pollutant levels in the outside atmosphere and the humidity.

The systems use two infinitely adjustable refrigerant compressors and in conditions where there is an external temperature of 48°C and a solar insolation of 1kW per square metre, they are said to be able to drop the interior temperature from 70°C to 25°C "within minutes".

Each of the four occupants is able to adjust their own air temperature and air flow. These personal settings are stored in the memory of

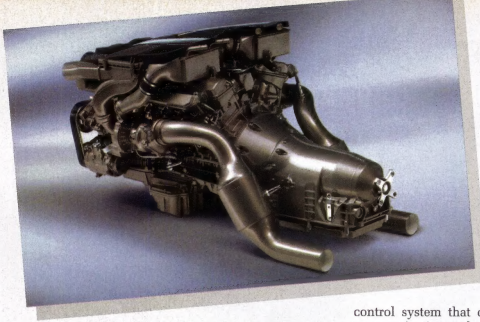

Some of the systems being controlled include:

■ The Parktronic system, where ultrasonic sensors on the front and rear bumpers are used to measure the distances to the nearest objects. The driver is informed of this via a display and acoustic signals.

■ Distronic – proximity-based cruise control system that uses a radar sensor located behind the front bumper and maintains a constant gap to the car in front. The system can apply the brakes in addition to modulating the throttle.

■ Linguatronic (no, I didn't make the name up!) is a voice control system that can be used to operate the audio, communication and navigation systems. In fact, only the sound volume cannot be changed by voice command – one assumes because if it gets too loud it may not be able to hear shouted commands to quieten down!

■ An electronic Keyless-Go system automatically unlocks the doors and bootlid as the driver approaches the car. The electronic ignition key receives signals from induction aerials located in the doors, in the centre console, beneath the parcel shelf and in the rear bumper. The key then sends out an identification code; if this code corresponds to the value stored in the memory, the driver can enter the vehicle immediately or open the boot lid. Pressing a button on the shift lever of the automatic transmission then starts the engine.

the appropriate electronic ignition key – presumably for when the car is being used with many different chauffeur/occupant combinations.

The rear passengers have no less than ten air outlets. With the exception of the footwells, the airflow through each outlet can be individually controlled via means of a control wheel operating electric motor-actuated flaps inside the vents.

Passenger protection

Should the vehicle be involved in a crash, the TELEAID system automatically calls for help through the car's fixed-installation phone. In addition to informing emergency services of the accident, the system also guides the services to the scene. The system can be triggered by either the airbag sensor or the roll-over sensor.

In addition, vehicle occupants are able to send an SOS at any time by pressing either of the two cabin-mounted red SOS buttons. TELEAID is currently operational in Germany, the USA and Japan.

However, these motors are actually under the control of the climate control electronics, making it possible to vary the distribution of air without affecting the volume of air flowing into the cabin – which can be as great as 715 cubic metres/hour. In total, the climate control system uses 14 electric motors.

Also available (as an option) is a roof-mounted 63-watt solar panel which circulates air through the interior of the car when the ignition is switched off.

Driving the monster

The 76 electronic control units in the car communicate via four CAN databus networks and an optical databus.

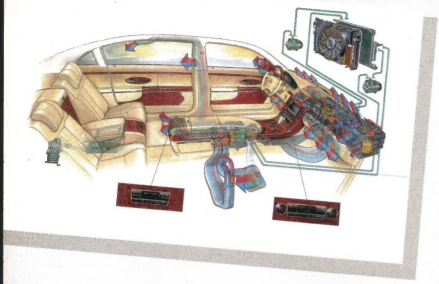

Powerful headlights, LED tail lights

Gas discharge headlights are fitted to the Maybach. Unusually, the gas-discharge lights are used on both high and low beams, with a shutter sliding between the lamp and the lens to obscure the upper part of the beam when low-beam is being used. On high beam the shutter is retracted and additional halogen spotlights in the inner headlights are switched on.

With the exception of the reversing lights, the tail-lights are fully LED – a total of 528 LEDs is used. The high-mount centre brake light and the side indicator repeaters in the exterior mirror housings also use LEDs.

The complete lighting system is managed by an electronic control unit that has various emergency lighting functions stored in its memory.

Should a data link or electronic control unit fail, the automatic emergency program comes into operation, preventing failure of the complete lighting system.

And if a bulb fails, other lights are automatically switched on to compensate.

The airbags are of a two-stage design. These take into account the mass of the individual seat occupants and the severity of the crash impact to inflate the bags either partially or completely.

In addition to driver and passenger airbags, there are four side airbags (each integrated into a seat backrest) and four window bags which deploy curtain-like across the side windows. As well as inflating in a side impact, the window bags are triggered during a rollover.

Of course, a car like this would never break down but should the unthinkable happen, help can be gained through the Telediagnosis service.

By pressing a button on the car phone, communication is established with a central Customer Assistance Centre. A customer adviser is then able to speak to the driver while at the same time viewing data transmitted from the car – vehicle and engine model, year of manufacture, engine temperature, battery voltage, mileage and any fault or warning messages stored in the memory. The vehicle location is also transmitted. Telediagnosis is currently available in Germany and the USA.

Shortly before the next service is due, the car automatically contacts – via its phone – the Customer Assistance Centre, and transmits details of the vehicle's condition and any necessary maintenance work that is required. Personnel at the centre then arrange for this work to be completed at the service.

Power to burn

The non-electronic technologies of the Maybach are just as advanced – from the automatic height-controlled air suspension, glass that contains an intermediate layer of four plastic membranes to reduce noise transmittance, to the 405kW twin turbocharged 5.5-litre V12 engine, which can accelerate the 2.7-tonne Maybach to 100km/h in an astonishing 5.2 seconds.

Whether you see the Maybach as an obscene example of an excess of wealth being used to squander the earth's resources or alternatively, as one of the most admirable cars ever built, rather depends on your viewpoint. But you can be certain that many of the electronic technologies seen in the Maybach will trickle down to cars that you and I are likely to be driving in the future. **SC**

MAILBAG

AM stereo turned off at 2BL

The ABC AM station 2BL/702 switched off broadcasting in stereo a couple of months ago. The situation is dire. Virtually nobody broadcasts in AM-stereo any more.

Spectrum is so scarce. Not maximising what we can do with what is available is such a travesty. Given all the work SILICON CHIP and EA contributed to the format, I was hoping you might have a few ideas about raising profile and getting some publicity.

Mike Ryan,
via email.

Comment: since 2BL is mainly talkback, they probably figured that no-one would miss AM stereo.

Another solution for SPAM email

Since I am plagued with between 40 and 50 spam emails a day, I was interested to read 'What You Should Do About Spam' in the September 2002 edition. However, you did not mention the solution that I and other heavy SPAM recipients have adopted in order to live with this problem. We have installed a front-end or pre-processor program to our mail readers.

In my case, I use Mailwasher from **www.mailwasher.net** which I bought for $US20. It has proved to be money well spent.

Mailwasher downloads ONLY the headers of all email waiting for me on my ISP. I then check a Blacklist box for any obvious spam. Email I want to receive I add to a Friends list. Emails I am unsure about I can click on the header and the body of the message will start to download to the screen.

With practice one can judge within seconds if it is a real message or another 'I have $US32 million trapped in a Nigerian Bank and I will give you 35% if you help me to get it' type email. Clicking the Blacklist box stops the download.

One can add wild cards to the Blacklist List to trap obvious spam variations like bmii5455@eudoramail.com and bmii5453@eudoramail.com There is also a Filter capability.

After vetting, one 'Processes' the emails. Blacklisted emails are bounced and deleted. Genuine emails are downloaded. In this way future emails are preprocessed with my Blacklist and Friends Lists. Friends do not appear in the listing while the Blacklisted ones appear for my reconfirmation.

I do not see that one can stop email spam the way one can totally block junk faxes. Spam email is worldwide and I regret I cannot see any of your proposed solutions being effective. Preprocessing email is just part of my routine to read my email. It is a price one has to pay for living in an Internet world. Spam does not get me angry or frustrated. I never see it beyond the headers.

Peter Crowcroft,
DIY Electronics, (HK) Ltd,
Hong Kong.

Long-term EA reader changes over

After EA changed their format, I pulled out when my subscription ran out and emailed them to say they wouldn't last. While talking to a friend with similar views recently, I did a check and found that my words had come true!

We are both around the 50-mark and dedicated technicians of the old school – both deriving an income from this trade incidentally!

Whilst I had continually heard of SILICON CHIP magazine, I had never bought a copy, and so I find it amazing that you guys have taken over the complete history and are continuing on with the very type of publication that has been going for Donkey's Years that satisfies people like us!

I have immediately taken out a subscription but only for one year, 'cos I don't trust anybody any more! I have every hope that your publication will satisfy us – of course, I'll soon let you know if it doesn't!

Thanks, guys. People like us will thank you for your efforts and I hope will support you with input, etc. I certainly hope to supply some input when I have had a chance to enjoy your product.

Rick Boston,
R B Electronics, Warooka, SA.

Comment: thanks for your qualified endorsement. We have long been frustrated by how long it has taken EA's dissatisfied readers to realise that there was an alternative – us.

SILICON CHIP has now been running for over 15 years and yet there are many people out there who have never bothered to even pick up a copy. If you know someone who would appreciate SILICON CHIP, please put a copy under their noses!

Support for fuel cell project

Just a follow-on from Jacob Westerhoff's email to the editor in the September 2002 issue. I wish to add my support to his suggestion for SILICON CHIP to come up with a prototype fuel cell project.

Australia is not taking this technology seriously and therefore falling behind in providing the next generation of scientist and engineers a look into a small part of our future using this cleaner source of power generation. The USA and Europe are putting millions of dollars into fuel cell technology and research, to bring about change to our present internal combustion engine.

There are experimenters' type fuel cell kits in the USA and UK but the exchange rate makes them very expensive. Therefore I agree with Jacob that SILICON CHIP should do a follow-up article by providing links to where an experimenter can purchase the parts needed at reasonable cost and

start up a technology and experimenters' page.

Chris Lock,
via email.

Likes change to nanofarads

Well done on changing from .0047µF to 4.7nF, etc. It is certainly easier to use, especially when you have to write or type the values out. By the way, will you be moving to get rid of the decimal point. For example will you be changing from 4.7nF to 4n7?

I was always led to believe that decimal points can be a problem when printed and then copied a few times. Sometimes the decimal points can get lost in the printing process, making values hard to read or at worst, be incorrectly read as a different value. I came across this problem many times when I used photocopies of photocopies of circuits with small print.

I guess though in such a clearly drafted magazine as SC that should not be a problem.

Once again a great issue and I particularly found the article on the Barlow Wadley receiver extremely interesting. I have a Yaesu FRG7 which works on a similar system and performs very well. I pity the poor repair person having to follow the circuit of the Barlow Wadley; it is drawn in a non-conventional style to say the least!

Leon Williams,
via email.

Comment: at this stage we do not plan to eliminate decimal points from component value labelling on circuits and other diagrams. While many people like that approach, it entails yet another hurdle for the beginner to overcome.

Environmentalists are ranting

After Ross Tester's farcical article in March 2002 on solar power, I was very close to writing a letter taking him to task over his preposterous statements. Apathy prevailed, although I was pleased to see a number of readers did respond.

Upon reading your October 2002 editorial referring to the "doom and gloom" greenies, SILICON CHIP's attitude toward any environmental cause can be summarised along the lines of "As long as it doesn't affect our comfortable lives or cost a couple of cents more, all well and good, otherwise it isn't worth the trouble or cost". It is a position that I am saddened and surprised by, given the scientific mindset that you and your colleagues would most likely share.

As you wrote, the likening of the economy to an amplifier is not new. In fact, it can be extended to encompass the effects of human technology as a whole. Take for example our production of food. From foraging and hunting, the burdening of beasts for tilling farms freed us from manual labour and greatly increased food output. The time that was freed allowed research into other pursuits which (among other things), gave us the industrial revolution.

Today, it takes only a handful of people to fell, sow, irrigate and tend to great swathes of land. The vast majority of the population is fed by the labours of a relative few. An impressive amplification indeed.

Similiarly, however, our industrial inputs and outputs (both useful products and waste) have magnified with time. Keeping in mind the Earth's biosphere is a finite source and a finite sink, the positive feedback of this system will eventually hit a limit. Conventional economic thinking doesn't recognise these limits and assumes consumption can continue unabated. The environmental movement recognises these limits and seeks to place some negative feedback into the system by maintaining the health of the biosphere which ultimately supports us.

You rejoice in the fact that our lives and economy have improved in the last 30, 40 and 50 years. This is only a tiny fraction of the amount of time it has taken for the earth to generate the petrochemicals, coal, timber and other resources on which our whole economy is hinged. Some resources are renewable (eg; fisheries) however we deplete them at rates far in excess of the natural restock rate.

Unless we are careful, it will take only a further fraction of geological time before we have consumed all "banked" resources and are forced to take only what can be sustainably restocked. Our current economically

The Tiger comes to Australia

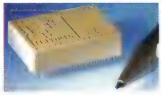

The BASIC, Tiny and Economy Tigers are sold in Australia by JED, with W98/NT software and local single board systems.

Tigers are modules running true compiled multi-tasking BASIC in a 16/32 bit core, with typically 512K bytes of FLASH (program and data) memory and 32/128/512 K bytes of RAM. The **Tiny Tiger** has four, 10 bit analog ins, lots of digital I/O, two UARTs, SPI, I²C, 1-wire, RTC and has low cost W98/NT compile, debug and download software.

JED makes four Australian boards with up to 64 screw-terminal I/O, more UARTs & LCD/keyboard support. See JED's www site for data.

Intelligent RS232 to RS485 Converter

The JED 995X is an opto-isolated standards converter for 2/4 wire RS422/485 networks. It has a built-in microprocessor controlling TX-ON, fixing Windows timing problems of PCs using RTS line control. Several models available, inc. a new DIN rail mounting unit. JED995X: $160+gst.
Www.jedmicro.com.au/RS485.htm

$330 PC-PROM Programmer

This programmer plugs into a PC printer port and reads, writes and edits any 28 or 32-pin PROM. Comes with plug-pack, cable and software.
Also available is a multi-PROM UV eraser with timer, and a 32/32 PLCC converter.

JED Microprocessors Pty Ltd
173 Boronia Rd, Boronia, Victoria, 3155
Ph. 03 9762 3588, Fax 03 9762 5498
www.jedmicro.com.au

enriched lives will become a curious and fleeting moment in history.

As publishers of a magazine, I believe you have a duty of care in the views that you present and the influence it wields. I would highly recommend that you read "Naked Ape to Superspecies" (ISBN 1865081957) by David Suzuki. It may help you understand why the greenies are "ranting".

Ben Haszard,
via email.

Comment: if you had read all the Publisher's Letters going back 15 years, and further back in "Electronics Australia", you would know that we have deep concerns about the environment. However, we do not resile from our March 2002 article on solar power.

Moving goal posts on the auto ammeter

Thank you for the magazine. It is much appreciated and read from cover to cover when it arrives.

I noticed in the October 2002 Circuit Notebook pages a clamp used in a DC auto tester and wonder if the same principal can be used in the June 2002 ammeter. This would then enable the tester to be much more portable and used in a commercial application. If so, would calibration settings still be the same? Someone always wants to alter the goal posts, don't they?

Bob Hocking,
via email.

Comment: yep, people are always moving the goal posts. In principle, since both circuits used the same Hall Effect pickup, the clamp idea should work with the June 2002 circuit. Wish we'd thought of it.

Amateur radio articles wanted

I would like to support the suggestions made by G. J. Wilson in October's edition of SILICON CHIP, regarding radio-related articles. I realise that radio and scanning related topics are not everyone's cup of tea. This has obviously been proven by the demise of any related magazines as well as the lack of new people taking on these hobbies, but if we all sit back and watch it happen it obviously will.

It is no secret that the Internet has taken the gloss away from Amateur Radio. After all, what young person would want to endure the stress of studying and sitting for an Amateur licence when they can just jump on the web with only the most basic computer skills. And the cost involved now in purchasing a scanner capable of being able to follow the trunking network for a lot of people would be over the top.

But SILICON CHIP could from time to time run related articles. This could spark the interest of people that previously had no knowledge of these hobbies or simply had overlooked them. It could even rejuvenate interest in people that have long ago sent their equipment to retirement into the back of the wardrobe. And nothing can strike up interest like a review on some new piece of equipment.

P. R. Dawson,
VK5NCM, via email.

Comment: have a look at the article on the simple VHF FM/AM radio in next month's issue.

Placement of padder capacitors

I believe that Rodney Champness is largely correct in his response to Stan Hood about placement of padder capacitors (page 85, October 2002 issue). Not only 'Radio & Hobbies' but also 'Radiotron Designer's Handbook' generally put padders at the earthy end of the oscillator coil secondary. They were also sometimes put at the top end of the coil but in such a way that the grid capacitor was connected to the fixed tuning capacitor plates; never as shown in the Tasma circuit.

I suspect that the reason was that it made dual (or more) wave switching simpler because another set of contacts would have been needed for the extra padder(s). I have a vague memory also that the early variable padders were made in such a way that it was convenient to earth the adjustment screw side to avoid capacitive disturbance during alignment.

The 'Colpitts' argument is really a bit of a red herring because that circuit uses the capacitance divider to achieve the phase rotation necessary for oscillation whereas the oscillator coil uses the transformer action of the two windings to achieve that result.

The reason the Tasma circuit is so effective is that the full voltage developed across the oscillator coil secondary is applied (via the grid capacitor) to the grid of the mixer. Any other arrangement must result in a (probably variable) voltage divider effect with the distinct possibility that oscillation will be less reliable at the low-frequency end of the band.

In my early days, it was standard practice to replace the mixer when 2FC could not be received although it was sometimes possible to postpone the inevitable by tuning higher up to get the oscillator working and then inching back to the desired lower frequency. Nobody that I knew then used the Tasma trick as a cure.

Alan March,
via email.

Cable modems vulnerable in thunderstorms

As a cable modem user I am worried about the high incidence of damage to cable modems caused by lightning strikes. I am told that the cable system of Telsta Bigpond has no protection. During a recent mild electrical storm in the Brisbane region, a very high percentage of cable modems were destroyed.

I am hoping that in the near future somebody might publish a device to add into the cable to prevent such incidences from happening.

Derek J. Gratz,
via email.

Comment: there are power boards with surge and phone line protection (eg, DSE Cat M-7868 for $39.80) but these do not protect cable modems. The only foolproof method of protection against lightning strikes is to disconnect your computer and modem from the power and cable socket – otherwise the modem is the meat in the sandwich.

Even if there is no direct hit on the lines, a distant lightning strike may raise the earth potential of the exchange sufficiently high to cause a modem breakdown when it is earthed locally via the mains. Of course, the computer itself is also at risk. **SC**

And we thought 6 megapixels was big news!

In publishing a monthly magazine, there's always a balancing act between what we would like to fit in each month and what we can actually fit in each month.
The review of the new 6-megapixel Canon EOS D-60 in the October issue is a prime example. It was originally written in late July, ready for the September issue.
But due to space constraints, it was "held over" until October.
Almost before the ink was dry (in fact, before the magazine actually went on sale) we received a press release from Canon telling us about their newest release . . . the 11.1 megapixel EOS-1Ds.

Canon Australia has announced the launch of the EOS-1Ds, the world's highest resolution digital camera for the professional photographer.

Featuring the world's first full frame 35mm CMOS sensor with 11.1 million effective pixels, the EOS-1Ds is suitable for a range of professional uses including studio, commercial, photo journalism and fashion photography.

"For years, photographers have talked about the 'Holy Grail' of digital SLR cameras: high resolution and full 35mm format sensor. The EOS-1Ds achieves this" said Scott Jackson of Canon Australia.

Canon's ground breaking CMOS technologies have allowed massive advances in resolution and functional features in the EOS-1Ds.

The full-frame CMOS sensor, for example, is the same size and aspect ratio as 35mm film but now allows ultra-high resolution in the SLR format – delivering almost twice the resolution offered in today's professional digital SLR market. The sensor also enables unprecedented digital use of wide-angle lenses without any focal length magnification. Another benefit is the sensor's high signal to noise ratio that minimises image noise.

The EOS-1Ds delivers high quality images, superior colour reproduction and an extensive tonal range to produce pictures of equal or higher quality than the 35mm slide film traditionally favoured by professionals. Even at the highest quality setting, the EOS-1Ds can capture images at around three frames per second for a ten-frame burst.

Features

An image enlargement function has been introduced, allowing 25 sections of an image to be enlarged on the camera's LCD screen, to check for detail and sharpness.

Battery life has been improved as the CMOS sensor consumes less power than CCDs. The NP-E3 battery pack can now capture up to 600 exposures on one charge (at 20°C).

The high-speed FireWire standard, IEEE1394, enables 50 Mbps throughput, with high transfer speeds allowing rapid plug and play downloads to a computer. CF cards can be formatted in either the FAT16 or FAT32 file system.

The unique ability to dial in colour temperatures in degrees Kelvin between 2800°K and 10,000°K to meet specific lighting conditions.

Data Verification

The new Data Verification Kit DVK-E1 consists of a dedicated IC card and card reader with special software for Windows 2000/XP. This allows the EOS-1Ds' image files to be checked to confirm that they have remained absolutely unaltered after circulation to verify authenticity. The ability to prove an image is unaltered is extremely important when digital files are used as evidence in court, for example.

When, where and how much?

The Canon EOS-1Ds will be available in the fourth quarter of this year from Canon Professional Photographic Dealers nationally. Price is yet to be confirmed. **SC**

Footnote:
And just as *this* issue went to press, yet another press release, this time from Baltronics, introducing their new 22 megapixel Sinarback 54 medium-format digital back. That's right – 22 megapixels. Where will it end!!!!

Now you you can shoot real 3D MOVIES with your own camcorder!

Last month, we introduced the subject of 3D TV and checked out the liquid crystal shutter (LCS) spectacles you need to view 3D in your own home. This month, we check out a clever accessory which enables you to shoot 3D movies with your own camcorder!

by Barrie Smith

In technology terms, we are constantly reminded that Australians are a nation of early adopters. Decades back we fell over ourselves to acquire VCRs when they became available; same with CD players; then it was video camcorders. Today the 'hot' items are DVD players.

But virtually all of these are standalone purchases: once you've bought the CD unit, VCR, etc, you can't deck them out with too many add-ons.

This was the case with the video camcorder – until the Japanese majors introduced the Mini DV format. Then all hell broke loose as the computer interests (both hardware and software) delivered post-production solutions so Mum, Dad and the kids could edit their home videos into passably viewable shape.

But nothing much has been added to the camera end of the equation . . . until now! Now there is a relatively simple method of shooting 3D TV for home use.

3D fanatic

As part of my scrabble through Sydney company Mindflux's warehouse to prepare last month's article, I came upon a device that fits to almost any home video camcorder (analog or digital) and converts it to a stereoscopic capture device.

At this point I should declare that I am a 3D nut. I own a bundle of working stereo still cameras, ranging from early 20th century wood, leather and brass gems right up to 50s 35mm stereo snappers, as exemplified in the Stereo-Realist and its ilk.

And there was the time, in a moment of madness, I happened to be in the USA in the early 80s when the Nimslo 4-lens 35mm stereo camera was fresh on the market: I bought one and was soon able to enjoy the lenticular 'happy snap' prints this system could produce.

So you could say I'm well and truly binocularly-bewitched and a sucker for anything that can capture the world in real 3D.

Nu-View 3D adaptor

As Mindflux's Mark Giles handed over the loaner Nu-View 3D adaptor kit to me, there was a slightly odd look on his face. He obviously suspected I had no sense of what I was in for. And he was right.

The gear is impressive to say the least, for what is ostensibly a consumer product.

An early adopter of a Stereo-Realist camera, Dwight D (later to become President) Eisenhower.

I had already spent some time with a few 3D VHS tapes, a signal decoder and a pair of LCS (Liquid Crystal Shutter) spectacles and so I had a handle on the stereo video experience.

The first tape I ran at home was entitled Camp Blood, so I naturally thought it was a horror movie with maybe a bit of 'in your face' 3D action . . . remember these are stereo pictures!

But in previewing it, I rapidly discovered it was an R-rated soft porn production with an amply endowed young lady thrusting her stereo pair into the camera. This was in your face, all right – with one D-cup for each eye in some scenes. But I quickly realised I would have to hide this 'hot' tape from the littlies who reside in my home and maybe take a more leisurely peek later.

Then on to the Nu-View. Thanks to Canon Australia I managed to borrow one of their top new Mini DV camcorders, the excellent MVX1i model with a 10X optical zoom lens. This I used for all the tests with the Nu-View unit.

The adaptor box was opened, the gear taken out, setup instructions read and the device fitted onto the camera. Taking a brave step, I shot a quick test of the family around the house, the front verandah, the cars across the street. Then, preview time.

The camera's output was hooked into the TV's composite video input

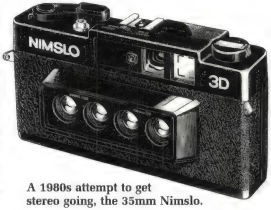

A 1980s attempt to get stereo going, the 35mm Nimslo.

and the decoder was plugged into the TV's composite video output; the latter would emit the sync pulses for the LCS spectacles to do their stuff.

Don glasses and then replay the

Quite a handful: a Canon camcorder and a Nu-View adaptor.

The Nu-View adaptor. Note the two LCS panels, which are actually mounted at 90 degrees to each other but in this shot, the mirror at left makes them appear to be side-by-side.

tape. And up she came: a series of full colour, live action scenes in three dimensions on the home TV set. I have to admit I was stunned. It was so easy: just shoot – and play.

Principle of operation

The exciting thing about this answer to replicating the three dimensional experience is that it is one of the rare systems that have appeared in the 150 year or so history of stereoscopic image making that uses only one lens and one length of recording media.

Stereo Realist cameras, the View-Master viewers, even the IMAX 3D cinema process rely on a pair of taking and viewing lenses and separate film frames; IMAX 3D of course relies on a hefty paired camera unit and big, linked 70mm projectors.

The Nu-View is an electro-optical device that attaches to the front of almost any consumer camcorder to allow the easy recording of stereoscopic 3D video.

It relies on the interlaced field that is basic to the television system. The two fields of 312.5 lines each are recorded to create a single 625 line frame. The field rate is 50Hz (in PAL), the frame rate is 25 frames per second (fps), so in this 3D video plan, each alternate field is used to record/replay a left-right-left-right sequence of 3D views to create 25 fps of stereoscopic action.

This scheme is called "Field-sequential 3D" as noted in last month's article.

The camera, with the Nu-View device attached, records 25 left and 25 right eye views onto the Mini DV tape. Replay the tape, with unaided viewing, and you see a double image. Slip on the LCS spectacles and you see full-depth stereo 3D.

The Nu-View apparatus is well conceived and extremely well executed. The components include the shooting adaptor itself and a link arm assembly that fixes the adaptor to the camera, attaching at one end to the camera's tripod thread, with the other end connecting to a threaded rod screwed into the adaptor's base.

There is also a cable which connects the camera's composite video output to the adaptor's video input, an Allen key, a bayonet ring and stepping rings which fix the adaptor's shooting port to the cameras' filter thread, a soft cover for the adaptor and one alkaline AAA battery.

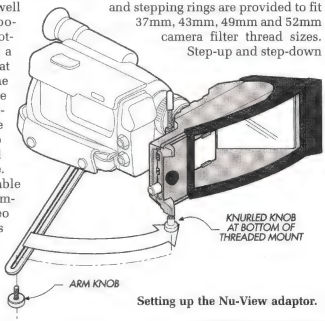

Setting up the Nu-View adaptor.

Some notes on the setup

- The composite video connection between the device and the camera's video output is essential in order to provide field sync pulses to fire the adaptor's integral liquid crystal shutters (more of this later).
- The adaptor's shooting port (through which the taking lens views) connects to the camera's filter thread and stepping rings are provided to fit 37mm, 43mm, 49mm and 52mm camera filter thread sizes. Step-up and step-down

Looking at the "business end" of the Nu-View 3D converter, here attached to a standard Canon MVX1i Mini DV Camcorder.

rings can be bought locally to fit other sizes.

- An Allen key is provided so that you can adjust the vertical alignment of the mirror, otherwise your stereo pair will suffer from unwanted vertical parallax.
- The adaptor works with analog and digital camcorders, NTSC or PAL.
- You can copy and edit any 3D video shot with the adaptor.
- The adaptor does not work with film movie cameras nor early tube video cameras.

The scheme

In simple terms, the Nu-View adaptor is simply a shooting port through which the video camera shoots anything it is pointed at. The zoom still works as normal, although some cameras with very wide entry apertures (larger than 52mm) may experience cut off corners from the adaptor.

Auto focus works as normal, as do the auto exposure and white balance functions. One negative: I noticed when the zoom was pushed to its maximum that definition fell off markedly – a product of the clutter (Liquid Crystal Shutters, mirrors, etc) in front of the lens!

The adaptor is roughly triangular in shape. Behind its curved front window can be seen a pair of LCS panels, mounted at 90 degrees to each other; the camera lens' optical path aims straight through one of these panels (the right eye view), with the other providing the left eye view, with its image passing through a beam splitter. Most of the housing's interior is taken up by a large front-silvered mirror which corrects right-to-left orientation of the left eye view. And that's about all.

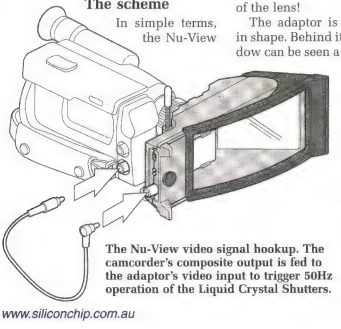

The Nu-View video signal hookup. The camcorder's composite output is fed to the adaptor's video input to trigger 50Hz operation of the Liquid Crystal Shutters.

The side of the device has a battery well (for the AAA alkaline cell), an on/off switch and the video input terminal. At the opposite side of the adaptor there is a knob, centred amidst a pair of sweeping curve indicators and the legend 0 (for infinity).

This knob is the convergence adjustment to vary the position of the stereo effect; when twisted it swivels the internal mirror to alter the acceptance angle of the left LCS panel. The adaptor's inter-ocular distance is 56mm – slightly smaller than the average human's eye separation of 65mm.

Note: the convergence knob does not adjust interaxial separation by any significant amount. Its job is only to adjust the distance at which the optical axes of the two 'adaptor' eye views overlap. This in turn sets the ZPD (Zero Parallax Distance) also known as convergence distance.

Andrew Woods comments that more on this effect is discussed in the book "Foundations of the Stereoscopic Cinema" available as a free download from http://www.stereoscopic.org/library

This convergence control is the secret to successful and enjoyable (for the viewer) stereoscopic video. You can place virtually any object in front of the stereo 'window' (the TV set's frame) or behind it. Having said that, the unit is very accommodating in that the eyes will compensate for any slight maladjustment; extended scenes

Display Systems

The Nu-View is now marketed by Display Systems' 3D and was acquired from the original manufacturer, 3D Video. The device is manufactured in the USA by 'i-O Display Systems'.

Aside from the Nu-View, this Sacramento, California company (www.i-glasses.com) manufactures personal display devices and other stereoscopic 3D products used in a broad array of applications from company entertainment to medical and commercial uses.

It is regarded as the world's leading manufacturer and supplier of head mounted personal display devices.

And here's what it looks like from side-on. Sure, it becomes a little unweildy – but you do get 3D!

with the wrong setting may give rise to eye-strain; care should be taken to avoid shooting extremely close and very distant subjects in the one scene.

Experience

On the second day with the Nu-View I had some real fun and found that using the Nu-View was really quite simple. Let's say I would line up on a tree in foreground, with a distant scene behind. Having set the zoom lens and determined my framing composition I then set the convergence, in this case choosing to set it on the tree; the image of the tree in the viewfinder became a single one, with other subject matter, both fore and aft appearing as double images.

You do have amazing freedom with the zoom; in some cases I shot with the lens at wide angle, then occasionally shot subject matter with the zoom fully extended.

It does help if you shoot in good light; viewing the tape at home you find that dark or backlit scenes are a little murky as the tonal range is limited by all the clutter that has been placed in the subject-to-lens-to-viewer path: beam splitters, Liquid Crystal Shutters, LCS specs and so on. I also noted that the beam splitter has its surfaces treated with a polariser to reduce internal reflection. Bang, there goes another f stop of light!

It also helps if you avoid any flare in the scene as it is most likely the flare will be captured by only one 'eye' and replay as a ghost image.

On one shooting safari, for some reason, I noticed that the vertical alignment had shifted (it had been perfect straight out of the box). Without resorting to the Allen key adjustment I merely twisted the adaptor slightly in its position and everything righted itself – but rotational alignment is important. Another time the adaptor came adrift from the camera; perhaps the adaptor-camera link could be better engineered.

Becoming braver, I started shooting scenes with to-and-fro movement. My small son, astride his trusty 16-inch bike, raced towards me from 20 metres distance, passed only a metre away, then moved off to a distant spot. I 'pulled' convergence and so managed to control the stereo window. The result was terrific.

Summary

I became thoroughly enamoured of the Nu-View. If I had the time, I would shoot 3D video from daybreak to dusk.

On the job, using the Nu-View on a camcorder is admittedly a challenge in juggling: in my case, the camera, battery and tape weighed in at around 750g; the Nu-View adaptor was another 620g; add the AV cable and the scales hit 1.4kg. A tripod is a help and saves straining your wrist muscles but does limit your shooting freedom. Coping with the camera on/off switch, the adaptor's power button, the zoom lens plus the convergence control is quite a feat.

There is also a downside in viewing any 3D video made with the adaptor, which is the bother of setting up the field sync decoder, arranging the audience and handing out the LCS spectacles. The view on screen is also a trifle dim; admittedly you can help this by cranking up the TV's brightness, contrast and colour saturation.

However, the biggest deterrent for most people will be the continuous flicker caused by the two sets of different 25 field images, the heart of the system. In my book, only the diehard enthusiast is going to persevere with 3D TV at present.

But at the end of the day, at the end of the 3D shoot – I just love the technology!

Cost of the Nu-View plus the H3D Video Eyewear is $989. The latter includes two pairs of lightweight, wireless liquid crystal 3D glasses, custom TV interface box, two RCA extension cables, manuals and power supply.

What to see

Until you're fully kitted up with camcorder and 3D gear perhaps you may like to preview what the pros are

Toshiba 3D

Way back in 1990, a Toshiba 3D NTSC VHS-C video camcorder appeared – a 'world first'. The SK-3D7 used two lenses and two 1/2-inch CCD sensors. The 3D images are viewed using an adaptor and LCS 3D specs.

The description I have is that the "camera serially records pictures onto a VHS-C video cassette tape at 60 fields/second, each image being recorded on one of two alternating fields that together comprise one picture frame." This the same Field-sequential 3D system that the Nu-View uses.

Toshiba's interesting twin lens 3D camera, which is still selling as a 'collector's item'.

However, the horizontal resolution is only 360 lines; current Mini DV camcorders can capture around 500 lines or more.

Video Synthesis, a company in Ohio, currently has four 'collector's items' left – at US$10,000 each! See www.vidsyn.com

Canon's 3D Lens

Canon Inc in the USA announced an interchangeable compact zoom lens for the XL1 digital video camcorder to enable recording of 3D images.

The company explains that "While there do exist special attachments that can be placed on the front of conventional video camcorder lenses that enable the capturing of 3D images, problems have arisen as a result of light loss and inaccurate left and right optical axes."

Obviously a tilt at the Nu-View!

The new Canon 3D zoom lens is claimed to solve these problems. They explain that a "high-precision 3D imaging optics system employed in the lens optically merges parallax images obtained from the left and right lenses via a high-speed shutter while the video signal is output by only one signal line."

It would appear that this is the same system as the Nu-View but possibly more elegantly executed, using as it does, "a focusing unit that uses triangulation to measure the distance to the subject and a motor to adjust the mirrors inside the left and right lenses accordingly, enabling the angle of convergence to be set automatically.

Unlike conventional 3D systems, with the Canon 3D zoom lens, there is no need to set the angle of convergence manually, enabling even novice users to easily record 3D scenes."

It was planned to sell for US$8499 but the company decided not to go ahead with production.

doing with the medium. Much of the material is on VHS or DVDs.

Below is a list of some of the available titles. The DVDs are mostly in NTSC, while there are some VHS tapes in PAL and/or NTSC. Most DVDs have a 2D version as well as the 'deepy'.

- **Sports Illustrated Swimsuit in Stereo 3D**

The content is from a Sports Illustrated photo shoot featuring nubile ladies. Watch the models pose and the photographers work, all in stereoscopic 3D.

Then there's a biggish list of titles derived from IMAX 3D presentations.

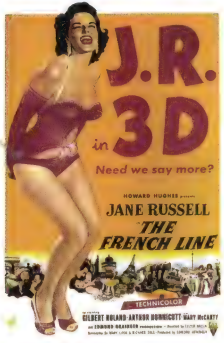

- **Alien Adventure**

Look out for invading aliens as they head toward planet Earth, in hope of establishing a new home for their people. They have to face Adventure Planet, a hi-tech amusement park not yet open to the public.... This was the first full-length digitally animated giant screen 3D film.

- **Encounter in the Third Dimension**

A ground-breaking venture into the realm of 3D filmmaking, with computer-generated imagery mixed with live action thrills. Includes a recreation of one of the earliest 3D movies ever made, through to classic clips from Hollywood's 3D heyday during the 1950s.

- **Haunted Castle**

Johnny, a young musician, travels to his late mother's castle to learn of his bequest, in accordance with her final wishes. The castle begins to come alive as materialising spirits show. Ends with a 3D ride as Johnny confronts Mr D and fights to free his mother's spirit.

1950s features in 3D: Sangaree and The French Line.

- **Ultimate G's**

Experience the thrill of flying in an aerobatics aircraft through the Grand Canyon, Little Colorado River and Lake Powell. The talents of the pilots give the audience the thrill of a lifetime.

- **Camp Blood**

My first taste of 3D, with a large dose of mammary input. Not for the kiddies!

As far as I could determine, the classic 1950s 3D feature films have not been transferred to 3D video; they have been converted to 3D video but just aren't available commercially.

This is a shame as some of the titles are classics: Hitchock's Dial M for Murder, Kiss me Kate, The French Line.

Perhaps the studios who own these titles will see the increasing interest in 3D and release these titles commercially on 3D DVD.

(Many other 3D Video titles are available – listed on Andrew Woods' Website: http://info.curtin.edu.au/~iwoodsa/3dmovie/videosites.html

Where do you get 'em?

Nu-View and similar products described in this story can be obtained in Australia from:

Mindflux: 02 9416 9619
www.mindflux.com.au

Digital Playtime:
www.digitalplaytime.com.au/3D/index.asp

EzyDVD:
www.ezydvd.com.au/

Direct 2U: 07 5455 3554

Acknowledgement

Barrie Smith would like to thank Jason Pang and Mark Giles of Mindflux for their help in providing equipment used in this story and, once again, is grateful to Andrew Woods at the Centre for Marine Science and Technology, Curtin University of Technology, Perth WA for his technical help. We also acknowledge Philip Heggie for a series of emails which provided the initial impetus for these articles. **SC**

DICK SMITH ELECTRONICS

Where do you go for great savings?

Watchguard Wireless Alarm System

Includes two high security remote controls for easy arming/disarming of the system, two wireless passive infrared sensors to detect intruder movement, one main control unit with powerful siren, flashing blue strobe & backup battery.

L 8048

Rebate

$399

Watchguard Wireless PIR Sensor

Don't let that intruder get into your home undetected! This easy to install, low maintenance sensor detects body movements and can be placed practically anywhere as it doesn't require any cables. Watchguard Wireless Alarm system required.

L 8049

Available special order only.

Rebate

$99

Watchguard Remote Control

Allows you to easily arm and disarm the system from anywhere in your home without having to remember a PIN number.

L 8050

Available special order only.

Rebate

$55

Watchguard Wireless Reed Switch

It performs all the functions of a standard wired reed but is wireless.

L 8051

Available special order only.

Rebate

$69

Watchguard Wireless Smoke Alarm

This smoke detector senses smoke early and sounds the alarm giving your family valuable time to escape.

L 8052

Available special order only.

Rebate

$120

BELKIN Surge Cube

Protects one electronic device from power surges. The design of the cube also saves space.

M 7235

$23.88

$15,000 connected equipment warranty

BELKIN SurgeMaster 6-Way Board

Protects delicate electrical circuitry from surges up to 33,000 Amps and has visual LED to alert to a surge. A built-in filter circuit also helps reduce any electromagnetic and radio frequency interference.

M 7238

$123

$50,000 connected equipment warranty

25 Drawer Parts Cabinet

Store your components and hardware items in these neat drawers and you'll always know where to find them!

Dimensions: 120mm x 300mm x 225mm (L x W x H).

H 4587

$16.92

Accessories not included.

3.5 Digit LCR Multimeter

Inductance and capacitance range, auto power off, continuity and diode test, frequency and duty cycle and transistor test. Low battery warning and over-range indication.

Q 1559

SAVE $27

$98

60MHz Dual Trace Oscilloscope

Dual-timebase, make more accurate timing measurements and compare portions of a signal at two different sweep speeds. Test capacitors, inductors, diodes, transistors and zeners easily with the in-built component tester. Complete with two probes.

Q 1806

SAVE $300

$998

***Limited stock** All stocks marked clearance, limited or with an '*' may not be available in all stores or via Direct Link. Rainchecks do not apply. Offers expire 28.11.2002*

DICK SMITH ELECTRONICS
That's where you go!

ON SALE FROM 24/10/2002

www.dse.com.au

Where do you go for the hottest prices?

DICK SMITH ELECTRONICS

32 Range Multimeter

3.5 digit 2000 count LCD screen. Diode and audible continuity test. Transistor test, 20A AC/DC current range and low battery warning.

Q 1427

$29.70 SAVE $9

43 Range Digital Multimeter

Capacitance, frequency, duty cycle and temperature functions. 4000 count LCD screen. Auto/manual ranging plus data hold. Includes 'K' type thermocouple. Relative zero function, diode and transistor test and audible continuity.

Q 1456

$49.68 SAVE $10

30 Range Digital Multimeter

Features include temperature range, 3.5 digit 2000 count LCD screen with large, easy to read digits, transistor test, diode test and audible continuity buzzer. Includes 'K' type thermocouple. 20A AC/DC current range.

Q 1447

$59.80 SAVE $20

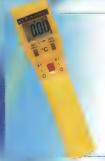

Digital Thermometer

Compact, hand-held digital thermometer with 3.5 digit LCD screen. Holds current and maximum readings. Includes K-type thermocouple probe. Unit range: -50°C – 1,300°C. Thermocouple range: -40°C – 260°C.

Q 1436

$72 SAVE $40

digitor 4.5V Adaptor, Int 90-260V

M 9921

$22.50

digitor 6V Adaptor, Int 90-260V

M 9922

$22.50

digitor 9V Adaptor, Int 90-260V

M 9923

$22.50

digitor 12V Adaptor, Int 90-260V

M 9925

$22.50

3V DC @ 1.5V Adaptor

Regulated DC power adaptor to suit GameBoy Pocket, Gameboy Colour and other 3V devices.

M 9642

$19.89

6, 7.5, 9, 12V DC @ 1A

Unregulated DC power adaptor with multi-plug output adaptors and selectable polarity. Ideal for products with a higher power demand. *M 9628*

$34.80

digitor 5-23V Adaptor Int 90-260V

M 9916

$39.60

digitor 3-12V Adaptor Int 90-260V

M 9917

$39.60

UNREGULATED DC POWER ADAPTORS

With multi-plug output adaptors and selectable polarity. Versatile power supply for around the home or workshop.

Adaptor 3-12V DC 300 mA

Unregulated DC power adaptor with multi-plug output adaptors that allow you to select between voltages of 3, 4.5, 6, 7.5, 9 and 12 at the flick of a switch.

Current: 300 mA

M 9626

$27.93

Adaptor 3-12V DC 500 mA

Unregulated DC power adaptor with multi-plug output adaptors allows you to select between voltages of 3, 4.5, 6, 7.5, 9 and 12 at the flick of a switch.

Current: 500 mA

M 9627

$29.98

PHONE, FAX & MAIL ORDERS

PHONE: 1300 366 644 (Local Call Charge) **FAX:** (02) 9642 9155

MAIL: **DICK SMITH ELECTRONICS,** Direct Link Reply Paid 500, PO Box 500, Regents Park DC NSW 2143 (No Stamp Required)

Please add freight (up to 10kg) to your order, as follows:

• $6.60 ($1 to $50) • $8.80 ($51 to $100) • $9.90 (over $101)
(quote available for orders over 10kg)

email: directlink@dse.com.au (enquiries only)

Major Credit Cards Accepted • Gift Vouchers Available

direct link

NEW STORES

GARDEN CITY(WESTERN AUSTRALIA)
Shop 165/166, Garden City Shopping Centre, Booragoon. **Ph: (08)9364 3755**

WODEN POWERHOUSE(ACT)
Cnr. Bradley & Corinna Street, Canberra. **Ph: (02)6232 4974**

CHATSWOOD POWERHOUSE(NEW SOUTH WALES)
2, Endeavour Street(Cnr Orchard and Endeavour Street). **Ph: (02)9413 2806**

CIVIC(ACT)
Cnr East Row and City Walk. **Ph: (02)6230 5465**

MORPHETT VALE(SA)
115 Main South Road. **Ph: (08)8326 4811**

**Limited stock* *All stocks marked clearance, limited or with an '*' may not be available in all stores or via Direct Link. Rainchecks do not apply. Offers expire 28.11.2002.*

ON SALE FROM 24/10/2002

DICK SMITH ELECTRONICS *That's where you go!*

www.dse.com.au

51905

DICK SMITH ELECTRONICS

Where do you go for the latest new releases?

digitor 18V Cordless Drill

A powerful and portable tool with variable speeds and 17 torque settings. Operates in foward/reverse and includes a NiCad battery pack and 10mm chuck.

T 4818

$39.87

SAVE $10

Cargo 2 Tray Toolbox

Attractive, hard-wearing 2 tray toolbox, just the thing to put your tools in their place! Dimensions: 380mm x 260mm x 220mm (L x W x H).

H 2621

$29.95

NEW

Handy to have around the house!

digitor Blade Fuse Pack

Includes 120 blade fuses ranging in value from 3 - 30 Amps

P 7987

$19.88

NEW

digitor 10x25 Binocular

$49.88

These compact binoculars have 10x magnification. The ruby coated lens are UV treated to provide a clear, glare free view and at just 235 grams you can take them anywhere.

L 8207

digitor Deluxe Fuse Kit

Includes a selection of 408 glass, blade mini blade fuses and holders.

P 7895

$59.88

AVAILABLE POWER HOUSE AND direct link ONLY

digitor Dummy Dome Camera

Deter that intruder with this replica camera. A very effective and affordable device that is quick and easy to install.

L 5869

$39.88

NEW

NOVEMBER SPECIAL!

BC 549C Low Noise Hi-Gain NPN

Z 1329

35¢ ea.

NOW BACK IN STOCK! LOWER NOISE, HIGHER GAIN THAN BC549

Motorised Potentiometer 16mm 50kΩ

Dual ganged 50kΩ 50 log potentiometer in a motorised gear housing.

R 7830

$9.98

NOVEMBER SPECIAL!

Brdg Rect DB155G 600V 1.5A DIP

Z 3300

58¢ ea.

SAVE 30%

Grab a handful for the component bin!

NOVEMBER SPECIAL!

5mm Bright green LED 10,000mcd

Z 4013

$5.37 ea.

SAVE 40%

NORMALLY $8.95

Super high intensity output

NOVEMBER SPECIAL!

Liquid Crystal Display Module

Dot matrix 16 character x 2 line module. Module size: 80mm x 36mm x 10mm. Microprocessor compatible 4 bit and 8 bit data bus. Data supplied with module includes character set map.

Z 4170

$18.84

NORMALLY $25.12

SAVE 25%

DICK SMITH ELECTRONICS *That's where you go!*

ON SALE FROM 24/10/2002

www.dse.com.au

Where do you go for the hottest kits around?

DICK SMITH ELECTRONICS

LEGO Spybotics

Spybotics is an on and off PC gaming experience enabling users to combine the virtual experience of video game play with real-time interactivity in the physical world. Players use an infrared remote control to manouver the interactive Spybots and to activate the unique function of each bot.

$114 each

Mountain Climber Kit

The Mountain Climber is a robotic car that projects infrared rays from three photo interrupters to follow a black line that you have created. It climbs slopes up to a 35˚ angle and plays tunes. Kit includes all components. 8 x AA batteries required.

K 1257

$49

Avoider III Kit

An 'intelligent' robot that emits an infrared beam to detect obstacles. The six legs simulate the walking action of an insect and the robot changes direction when it senses an obstruction. It will even find its way out of a maze! Power source: 2 AA batteries and one 9V battery required.

K 1057

$69.89

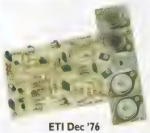

ETI Dec '76

100W Amplifier Module

You can use two of these for stereo, giving a massive 200W output. Power output: 100W into 4Ω. Power source required: +/-40V. Supplied with all components, PCB, fuses and transistor mounting bracket. Case optional.

K 3442

SAVE $5

$38.78

15W Brick Amp Kit

This compact unit delivers 15W per channel in stereo, allowing you to add extra channels to your home theatre set up such as rear or centre speakers. Includes deluxe pre-punched black case, front panel label and all components.

K 5609

ETI Jun '99

SAVE $13

$99

Dark Side Developer Kit

Bring to life Destroyer Droids that charge foward and All Terrain Armoured Transporters that stride on four legs. Includes a Micro-Scout microcomputer, a constructopedia, 578 LEGO building pieces, and more.

K 1486

MINDSTORMS

$75.87

Kit EPROM Programmer

Flexible and powerful programmer controlled via the parallel port on an IBM compatible PC. It allows the user to program EPROMs plus has a read back feature. Comes with components and hardware – including two quality EPROM test sockets. case and pre-punched screened front panel display PCB.

K 3602

ETI Sep '93

$133

AVAILABLE POWER HOUSE AND direct link ONLY

direct link Direct Link is equipped with the service centre to supply you with a hassle-free delivery direct to your door. **PHONE 1300 366 644** to place your order.

Availability: Our kits consist of many different parts from numerous suppliers. Whilst we have consulted closely with them and are satisfied as to their ability to supply, sometimes problems can arise in obtaining all of the parts. This means there is a slight chance that availability may be delayed. Rainchecks are available, however if you'd like to check beforehand, please don't hesitate to contact your local store. Offers expire 28/11/2002. *Limited stock All stocks marked clearance, limited or with an '*' may not be available in all stores or via Direct Link. Rainchecks do not apply.

5197D

ON SALE FROM 24/10/2002

DICK SMITH ELECTRONICS *That's where you go!*

www.dse.com.au

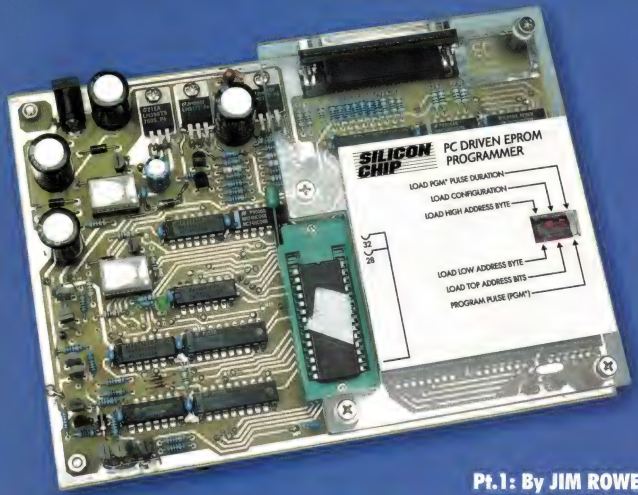

Pt.1: By JIM ROWE

A Windows-Based EPROM Programmer

This Windows-driven EPROM programmer/reader connects to your PC via a standard Centronics printer port. It's easy to build, with all the components on a double-sided PC board. It can read and program virtually all currently used EPROMs and OTP PROMs. No setup switches are required; all configuration and voltage selection is done by the PC.

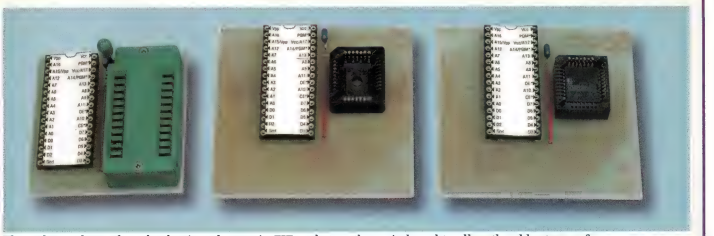

These three adapter boards plug into the 32-pin ZIF socket on the main board to allow the older types of EPROMs to be programmed. These include 32Kb devices in 24-pin DIL packages and devices in 32-pin PLCC (plastic leadless chip carrier) packages with capacities from 64Kb to 2Mb.

READ-ONLY MEMORIES or "ROMs" have been used for many years to store data and "firmware" programs in a huge range of digital equipment. So if you do servicing work on such equipment, it's very handy to have a device which can read and check the contents of a ROM.

And if you do development work on equipment with ROMs, it's essential to be able to program them as well. You need to be able to program EPROMs (erasable programmable ROMs) and ideally, OTP (one-time programmable) ROMs and EEPROMs (electrically erased programmable ROMs) as well.

Although freestanding programmer/readers are available, they're quite expensive. Even those that are controlled by a PC aren't cheap, with prices ranging from about $300 up to over $2000. Our new comprehensive design is much cheaper than that. We estimate that the kit cost should be around $160.

A good PC-driven programmer/reader was described in the September and October 1993 issues of "Electronics Australia". Designed by Dr Glenn Pure, it was very popular, with many hundreds of kits sold. It was given a further boost in January 2000, when Glenn Pure described how to adapt the original design for programming 1Mb (one megabit) EPROMs.

This new programmer/reader has been designed to build on the work of Glenn Pure and it gets around most of the shortcomings of the earlier version. It has all the circuitry on a single double-sided PC board and because all of the setting-up and device configuration are under software control, there's no off-board wiring. The board has one DB25 connector to accept the cable from the PC's printer port and a socket for a 12V AC plugpack.

The controlling software is Windows-based (Win95/98), rather than DOS-based as in the earlier design.

The programmer has one ZIF (zero insertion force) socket for the EPROM to be programmed or read. This is a 32-pin socket which can be configured by the software to suit devices in 28-pin or 32-pin DIL packages, with capacities from 64Kb (kilobits) to 2Mb (megabits).

It can also be used to work with older 32Kb devices in 24-pin DIL packages and devices in 32-pin PLCC (plastic leadless chip carrier) packages with capacities from 64Kb to 2Mb. This is done with small matching socket adaptors which fit into the ZIF socket.

How it works

Although there's lots more circuitry in the new programmer than in Glenn Pure's original, the basic operation is pretty straightforward. Let's refer to the block diagram shown in Fig.1.

As already noted, the programmer is designed to connect to the PC via a standard parallel (Centronics) printer port. It does not need the newer bidirectional ECP (extended capabilities

Table 1: Programmer Config Byte Control Functions

Config bit	Control Function	Value	Control Effect
CF0	ZIF socket pin 3(1) signal/voltage	Low (0)	Pin 3(1) = address line A15
		High (1)	Pin 3(1) = programming voltage Vpp
CF1	ZIF socket pin 22(20) signal/voltage	Low (0)	Pin 22(20) = CE* in program mode
		High (1)	Pin 22(20) = PGM* in program mode
CF2	ZIF socket pin 24(22) signal/voltage	Low (0)	Pin 24(22) = Vcc in program mode
		High (1)	Pin 24(22) = Vpp in program mode
CF3	ZIF socket pin 29(27) signal/voltage	Low (0)	Pin 29(27) = address line A14
		High (1)	Pin 29(27) = PGM* in program mode
CF4	ZIF socket pin 30(28) signal/voltage	Low (0)	Pin 30(28) = address line A17
		High (1)	Pin 30(28) = Vcc
CF5	Vcc in EPROM read mode	Low (0)	Vcc (read mode) = 3.0V
		High (1)	Vcc (read mode) = 5.0V
CF6	Vcc in EPROM write mode	Low (0)	Vcc (write mode) = 6.25V
		High (1)	Vcc (write mode) = 5.0V
CF7	Vpp voltage	Low (0)	Vpp = 21.0V
		High (1)	Vpp = 12.75V

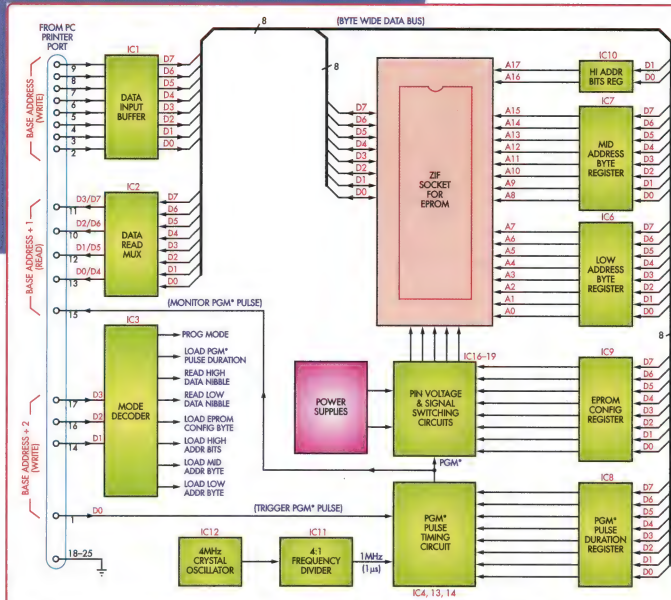

Fig.1: the programmer connects to the PC via a standard parallel (Centronics) printer port. Data comes in via pins 2-9 of the DB25 connector and is fed to buffer stage IC1. The outputs of this buffer are then fed to a byte-wide data bus, which goes to the EPROM programming socket and to various storage registers.

port) or EPP (enhanced parallel port). This makes it fully compatible with older PCs.

As a result of using the Centronics port, we have a total of 12 8-bit lines for 'outgoing' data from the PC to the programmer and five 8-bit lines for 'incoming' data.

Fortunately, the majority of PROMs have their data organised in 8-bit bytes and we're also able to handle the outgoing address, configuration and pulse timing data in (8-bit) bytes as well, so the eight data output lines provided in a standard printer port's main 'base I/O address' are all we need, for downloading all of this data.

As shown in Fig.1, data comes from the PC via pins 2-9 of the DB25 connector and is fed to buffer IC1. The outputs of this buffer are then fed to a byte-wide data bus, which goes to the EPROM programming socket and to various storage registers.

For example, when the software wants to change the current EPROM address, it can send down a byte representing the lowest eight address bits for storage in the 'low address byte register' IC6; and/or it can send a byte representing the next most significant eight address bits, for storage in the 'mid address byte register' IC7.

Alternatively or in addition, it can send down a byte with the two top address bits, for storage in the 'hi address bits register' IC10; or a byte providing the configuration data for the EPROM to be programmed, for storage in the 'EPROM config register' IC9, or a byte specifying the duration of the programming pulses to be used, for storage in the 'PGM* pulse duration register' IC8.

How does the software control which register receives this downloaded data or whether it goes to the EPROM? That's controlled by three more of the printer port's outgoing data lines. These are provided by bits D1-D3 of the control register at the

PC's I/O port address 'base + 2' (ie, two up from the port's main base address). These bit lines arrive on pins 14, 16 & 17 of the DB25 connector and are fed to the inputs of decoder IC3, where they're decoded to provide one of eight different 'mode control' logic signals.

These signals are used to control the current operating mode of the programmer and where the data bytes from IC1 are sent.

The 12th outgoing bit from the printer port (the least significant bit D0 of the port's control register) arrives on pin 1 of the DB25 connector and is used to trigger the programmer's PGM* hardware pulse timing circuit. This involves ICs 4, 13 & 14. When they're triggered, they produce a programming pulse with a length determined by the data byte currently stored in IC8.

All of the voltage setting and chip configuration data stored in config register IC9 is used to control switching circuits associated with ICs 16-19. This is how the software is able to set the correct voltage levels and pin functions for each type of EPROM and for each programming mode.

Nibble this, nibble that

So much for programming, then. But what about reading data already stored in an EPROM? Since a standard parallel printer port provides only five incoming data bit lines, we simply split the data byte from the EPROM into two four-bit 'nibbles' and send them back to the PC separately. The software then 'glues them back together' to produce the full data byte.

During a read operation, the data byte from the EPROM's current address appears on the data bus (the outputs of IC1 are turned off in this mode). It's then effectively split into two nibbles by multiplexer IC2, which presents one nibble or the other to pins 10-13 of the DB25 connector, as controlled by a 'read low data nibble' or a 'read high data nibble' signal from IC3.

In the PC, these pins connect to data bits D4-D7 of the port's read-only status register at I/O address 'base +1', so this enables the software to read each nibble separately before reassembling them into the read data byte.

The fifth and last incoming bit line on the printer port connects to pin 15 of the DB25 connector and this is used

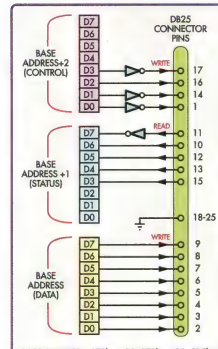

Fig.2: this diagram shows the basic arrangement of the various registers and I/O addresses associated with a PC's printer port.

in the programmer to provide a copy of the PGM* pulse, so that the software can tell when the hardware-timed pulse has ended. This bit line also goes back to the printer port's status register at I/O address 'base +1', specifically to that register's bit D3.

The basic arrangement of the various registers and I/O addresses associated with a PC's printer port is shown in Fig.2.

Circuit description

Now let's look at the main circuit, shown in Fig.3 (see over).

The data input buffer IC1 is a 74HC-245 octal bus transceiver. This is a bidirectional device, although it's used here only for buffering in the 'write' direction. The data bit lines from the DB25 connector are fed to its inputs via 100Ω stopper resistors, which minimise line reflections and ringing. (This is also done for all other port signal lines.)

The outputs of IC1 are enabled by a logic low signal applied to pin 19 in all of the programmer's modes, except the two for reading back EPROM data. In these two modes, the outputs are disabled by applying a logic high signal to pin 19, from gate IC4c.

In all other modes, IC1 receives the downloaded data from the PC printer port's base address and passes it straight through to the programmer's internal data bus. From here, it can be fed to any of the storage registers or to the ZIF socket and EPROM.

The data is loaded into each storage register as desired by applying a logic signal to its parallel load input. As mentioned earlier these 'load data' signals come from the outputs of mode decoder IC3, a 74HC138. So when the software wants the data byte to be loaded into low address byte register IC6 for example, it manipulates the three control bit lines feeding IC3 to force its Y0-bar output to go low.

This LAL* (Load Low Address, active low) signal is then inverted by IC5f and fed as an active high signal to pin 11 of IC6 so that it loads the data byte into its internal latches (ICs 6, 7, 8 & 9 are all 74HC373 octal latches).

Similarly, the software can have the data byte loaded into mid address byte register IC7 by manipulating the three bit lines feeding IC3, so that the Y1-bar output goes low. The resulting LAM* signal is then inverted by IC5a and fed as a LAM signal to pin 11 of IC7.

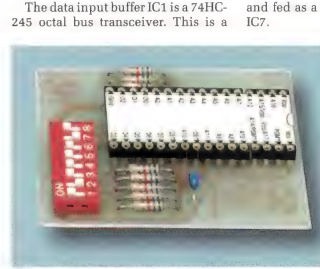

Also to be described next month is this simple plug-in PC board which is used to test the EPROM Programmer's read functions. The read data can be set up on the DIP switches.

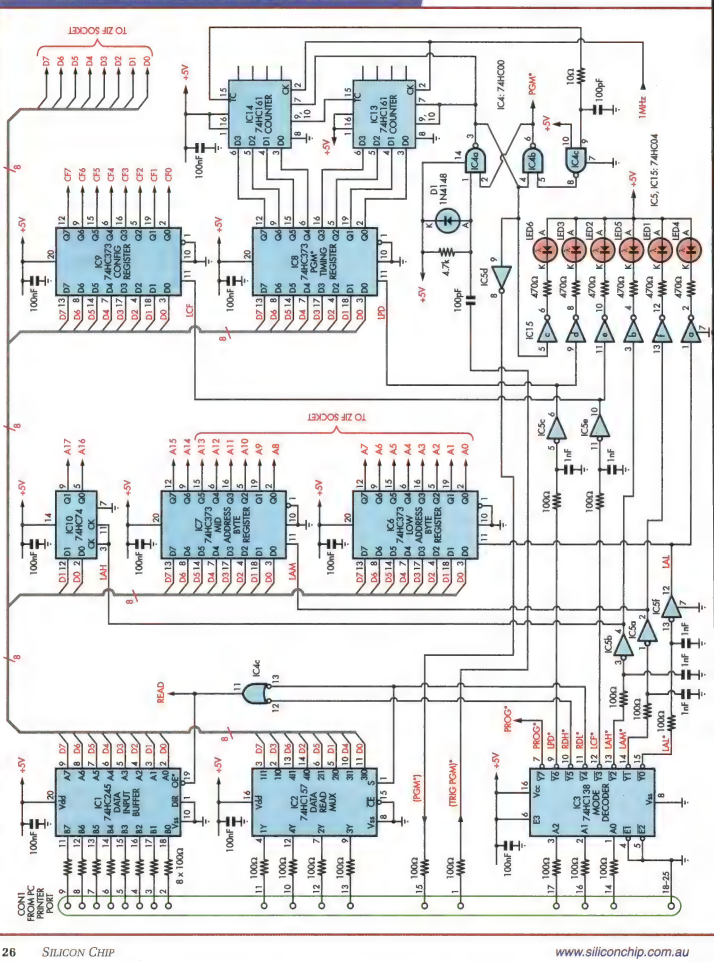
TO ZIF SOCKET
IC14 74HC161 COUNTER
IC13 74HC161 COUNTER
IC4a: 74HC00
IC5, IC15: 74HC04
IC9 74HC373 CONFIG REGISTER
IC8 74HC373 PGM* TIMING REGISTER
IC10 74HC74
IC7 74HC373 MID ADDRESS BYTE REGISTER
IC6 74HC373 LOW ADDRESS BYTE REGISTER
IC1 74HC245 DATA INPUT BUFFER
IC2 74HC157 DATA READ MUX
IC3 74HC138 MODE DECODER
D1 1N4148
1MHz
READ
PROG*
(PGM*)
(TRIG PGM)*
CON1 FROM PC PRINTER PORT
18-25

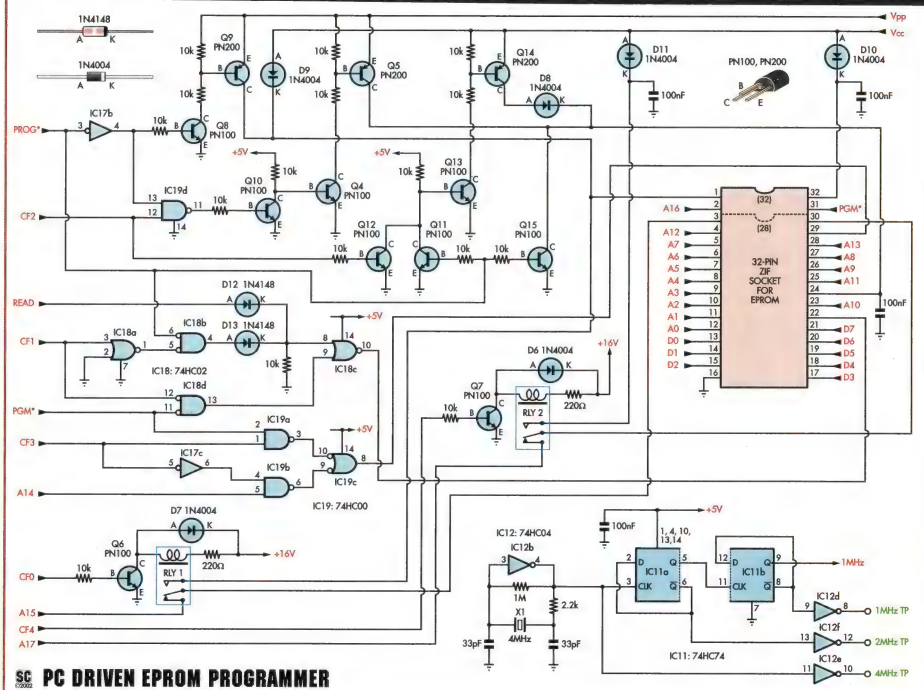

SC 2002 PC DRIVEN EPROM PROGRAMMER

Fig.3: the full circuit for the PC-Driven EPROM Programmer (minus the power supply). IC1 receives the downloaded data from the PC's printer port and passes it straight through to the programmer's internal data bus. From there it can be fed to any of the storage registers or to the ZIF socket and EPROM.

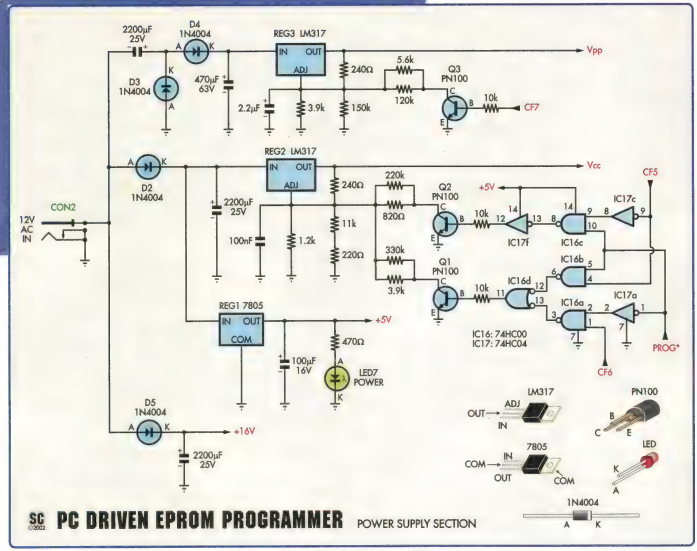

Fig.4: power for the EPROM Programmer comes from a 12VAC plugpack. This feeds three rectifier circuits and three 3-terminal regulators to derive four supply rails: Vpp, Vcc, +5V & +16V. The software controls the actual values of Vpp & Vcc to suit different types of EPROMs.

The data can be loaded into high address register IC10, config register IC9 or PGM* pulse duration register IC8 in the same way. The LAH* signal from the Y2-bar output of IC3 is used to load IC10, while the LCF* and LPD* signals from the Y3-bar and Y6-bar outputs of IC3 are used to load IC9 and IC8 respectively.

The only difference with the last of these signals is that there's a small low-pass RC filter between the Y6-bar output of IC3 and the input of inverter IC5c (the 100Ω resistor and 1nF capacitor). This is to prevent timing misloads due to narrow spurious glitches which can appear at the output of IC3.

IC5 also drives five inverters in IC15, which in turn drive LEDs 1-5. These LEDs light to indicate when data is being loaded into each of the registers. We'll come to LED6 in a moment.

Timing circuit

ICs4, 13 & 14 form the timing circuit for the programmer's PGM* pulses. As you can see, IC13 and IC14 are both 74HC161 4-bit synchronous counters, which together form an 8-bit counter. The counter's operation is controlled by IC4a and IC4b, which form the timing control flipflop.

Inverter IC12b and crystal X1 form a 4MHz oscillator which then drives flipflops IC11a and IC11b to give 2MHz and 1MHz clock signals. The 1MHz pulses from pin 9 of IC11b are fed to IC13 and IC14, so they count in accurate 1µs increments.

The 4MHz, 2MHz and 1MHz clock signals are also fed through to three inverters in IC12 and made available at on-board test points.

The timing counter works as follows. Normally the flipflop formed by IC4a and IC4b is reset, with pin 3 low and pin 6 high (and the latter is also the PGM* output line, so there is no pulse). In this state, the counters are in "parallel load" mode, with the data byte in timing register IC8 being loaded into them.

When the software sends down a programming trigger pulse via pin 1 of the DB25 connector, it is passed through the differentiating circuit formed by the 100pF capacitor, 4.7kΩ resistor and diode D1. The resulting very narrow negative-going pulse is then applied to pin 1 of IC4, which makes the control flipflop switch into its set or 'counting' state, with pin 3 now high and pin 6 low.

The low level on pin 6 thus forms the PGM* pulse, while the high level on pin 3 switches counters IC13 and

IC14 from parallel load mode into counting mode. They therefore begin counting the 1MHz clock pulses, starting from whatever binary value has been loaded into them from IC8.

This counting operation continues until IC13 and IC14 both reach their maximum or 'terminal' count of 255 decimal (11111111 binary or FF hex). Then the TC output of IC14 (pin 15) goes high and this signal is fed back through inverter stage IC4c to pin 5 of IC4b, which triggers the control flipflop back into its reset mode.

Pin 6 of the flipflop then flicks back high, ending the PGM* pulse, while pin 3 goes low and switches the counters back to parallel load mode.

The bottom line is that the timing circuit can produce a PGM* pulse anywhere between 1µs and 255µs, depending on the 'pulse duration' data byte loaded by the software into register IC8. But note that because the counter counts UP to 255 from the value parallel loaded from IC8, the actual pulse length generated by the circuit is given not directly by the value of the data byte but by the difference between it and 255; ie:

Pd = (255 - Dv) microseconds

where Pd is the pulse length and Dv is the value of the duration data byte. So to generate a 1µs pulse, the software must send down a value of 254. Similarly, a value of 0 will produce a pulse length of 255µs. For a 50µs pulse, it must send down a duration byte value of 205 and so on.

By the way, if you're wondering about that 10Ω resistor and 100pF capacitor in the timing circuit's terminal count feedback line, they form another glitch-swallowing low-pass filter. 74HC161 chips can produce a very narrow 'false TC output' glitch pulse when they're changing state at a lower count but the filter stops this glitch from upsetting the timing.

As well as setting the mode of counters IC13 & IC14, the signal at pin 3 of IC4a is fed through inverter IC5d to pin 15 of the printer port connector, so the PC software can monitor the PGM* pulse and sense when it ends. In addition, this signal is taken to inverter IC15c, which drives indicator LED6. This LED lights whenever a PGM* pulse is being generated.

ZIF switching

Most of the remaining circuitry is used for switching voltages and signal lines to various pins of the ZIF socket, to suit it to different EPROMs and for the various programmer operating modes. This is done under software control, mainly using the eight output lines from config register IC9. These are labelled CF0 - CF7 and their functions are shown in Table 1.

Other signals used by the switching circuitry are the PROG* output from mode decoder IC3 (pin 7, Y7-bar), the PGM* programming pulse from IC4 pin 6 and the READ signal from pin 11 of IC4c.

If you have a look at IC9, the CF0 signal drives transistor Q6, which operates relay RLY1. This controls the voltage/signal fed to pin 3 of the ZIF socket, allowing the software to select either address line A15 or programming voltage Vpp as required for different EPROMs.

Note that the same ZIF socket pin becomes pin 1 for 28-pin EPROMs. That's why Table 1 shows a second pin number in brackets. This convention is used with the other pins as well.

Similarly, the CF4 signal drives Q7 and relay RLY2, which controls the voltage/signal fed to pin 30(28) of the ZIF socket. In this case the software can select either address line A17 or Vcc, as required.

Signals CF1, CF2 and CF3 are also used to control ZIF socket pin voltages/signals, except that transistors and gates are used for the switching rather than relays. This is because this switching needs to be done relatively quickly, in conjunction with the PGM* pulses. These switching functions involve IC17-IC19, transistors Q4-5 and Q8-Q15 and diodes D8-D11.

Table 2: EPROMS The Programmer Can Handle

CAPACITY	PACKAGE	COMMON TYPE NUMBERS
32K bits (4K x 8)	24-pin DIP*	2732A, M2732A
64K bits (8K x 8)	28-pin DIP, 32-pin PLCC*	M2764A, 27C64, M27C64A
128K bits (16K x 8)	28-pin DIP, 32-pin PLCC*	27128A, M27128A, M27C128A, TMS27C128
256K bits (32K x 8)	28-pin DIP, 32-pin PLCC*	27256A, 27C256, M27256, M27C256, M27V256, AT27C256R
512K bits (64K x 8)	28-pin DIP, 32-pin PLCC*	27512, 27C512, M27512, M27C512, M27W512
1024K bits (128K x 8)	32-pin DIP, 32-pin PLCC*	27010, 271001, 27C010, 27C1001, M27W101
2048K bits (256K x 8)	32-pin DIP, 32-pin PLCC*	27020, 272001, 27C020, 27BV020, M27V201
(OTP VERSIONS CAN ONLY BE PROGRAMMED ONCE)		*WITH SOCKET ADAPTOR

Table 2: this table shows the range of EPROMs and OTPs that the new programmer can handle. Just about all common types are catered for, ranging from 32Kb 24-pin units to 2048Kb 32-pin DIP PLCC types.

Power supply

Referring back to Table 1, you can see that the remaining control signals from config register IC9 (CF5-CF7) are used to switch the values of chip supply voltages Vcc and Vpp, to suit the needs of different EPROMs in either read or write mode. To see how this switching is done, refer to the power supply circuit in Fig.4.

The programmer derives all its operating voltages from a standard 12VAC 1A plugpack, which connects via CON2. The 12VAC feeds three rectifier circuits, to provide a total of four different supply lines.

Diode D5 and a 2200µF filter capacitor provide the unregulated +16V line used to operate the two relays.

Diode D2 is also used as a halfwave rectifier, with another 2200µF reservoir capacitor. This feeds regulators REG1 and REG2. REG1 is a fixed type (7805) which provides the +5V supply line for all of the programmer's own logic chips and indicator LEDs (including power indicator LED7). REG2 is an adjustable type (LM317) and is used to provide the EPROM's programmable Vcc supply line.

Control signals CF5 and CF6 are used here, in conjunction with the programming mode control signal

Programming & Erasing EPROMs

Not too sure about EPROMs and how they work? Basically they're non-volatile memory devices, which means they can store digital data for long periods when no power is applied - until it's intentionally 'erased'. This makes them ideal for storing 'firmware' programs for microcomputers and microcontrollers and also for storing other data like lookup tables, graphics characters and computer BIOS routines.

The most common type of EPROM uses a single MOS transistor for each storage cell, with one such cell needed to store every bit (binary digit) of data in the EPROM. So a 256K-bit EPROM will have 262,144 MOS transistor cells – one for each bit.

Each transistor cell is very much like a normal depletion-mode MOSFET transistor, except that it contains a second inner gate electrode, separated from the source-drain channel in the silicon chip itself by a very thin (about 10nm) layer of silicon oxide. There's no electrical connection to this gate, which is therefore called a 'floating' gate.

Fig.5 shows a single EPROM cell.

When an EPROM is manufactured, the floating gate of each cell transistor has no electrical charge and as a result each channel can easily conduct electrons between source and drain. That's why a blank or erased EPROM effectively has a '1' stored in every memory cell.

For programming, a higher than normal voltage Vpp is applied to the drains of the transistors for a brief period and a positive '1' voltage is applied to the upper gate of each transistor to be programmed with a '0'. This produces a high field strength in those transistors and a fairly high current pulse flows through the channel. Some of the conduction electrons are sufficiently 'excited' that some of them tunnel up through the thin layer of insulating oxide and reach the floating gate.

Once there they cannot easily escape and as a result this gate becomes negatively-charged. When the transistor cell is 'read' with a normal voltage Vcc applied to the drain, the negative charge on the floating gate prevents conduction in the channel - so that cell is now said to be programmed with '0' rather than the original '1'. And since the charge on each floating gate remains there indefinitely, the programming is non-volatile, ie, loss of supply voltage does not lose the data.

What about erasing? Well, the most common type of EPROM is housed in a package with a transparent quartz window directly above the chip. This allows the data to be erased by subjecting the EPROM to fairly intense (about 12mW/sq cm) ultraviolet (UV) radiation for about 45-60 minutes. The high energy UV photons then excite the electrons in the floating gates, so they tunnel back through the thin oxide layer and return to the silicon chip. At the end of this erasing operation all floating gates on the chip are left uncharged and every memory cell contains a '1' again.

Of course, there are other methods of erasure such as in the EEPROM (electrically erased PROM). Here the erasing is performed on each cell or group of cells separately, by applying a relatively high negative voltage to the upper gates at the same time as the higher positive Vpp voltage is applied to the drains. This creates a high electric field through the floating gate, pushing the captive charge electrons back through the thin oxide layer and into the silicon.

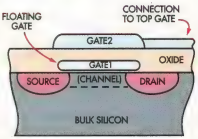

Fig.5: the basic structure of a single EPROM storage cell. A single MOS transistor is used for each cell, with each cell used to store one bit (ie, one binary digit). Note that there is no connection to Gate1.

This electrical erasure process is much faster than the UV radiation method and can be used to erase just some of the EEPROM's cells, without disturbing the data stored in the remaining cells.

'Flash' EPROMs are similar to EEPROMs but the transistor gate structure is modified to allow easier electrical erasure. This allows the charge to be removed from the floating gates without UV radiation or the application of a relatively high programming/erasing voltage.

PROG* (from mode decoder IC3, pin 7). These are fed to logic gates from IC16 and inverters from IC17, to control transistors Q1 and Q2. The two transistors switch in resistor combinations across the lower resistors in REG2's voltage setting divider, to control its output voltage Vcc.

As a result, the software can select the Vcc voltage fed to the EPROM socket pins – either 3.0V, 5.0V or 6.25V, – as needed for different EPROMs in either read or write mode.

The actual voltages produced by REG2 are about 0.7V higher than these nominal voltage figures, to allow for the voltage drop in the associated switching transistors and diodes. This means that the correct voltages are delivered at the ZIF socket pins, when an EPROM is present.

The final rectifier circuit is the voltage doubler using diodes D3 & D4 and 2200µF and 470µF electrolytic capacitors. This produces an unregulated output of about +33V which is used to feed regulator REG3, another LM317 adjustable type.

Regulator REG3 is used to produce the EPROM's Vpp supply line and as before it has resistors switched across the lower resistors of its voltage setting divider, to control its output voltage as needed for different EPROMs. In this case, control signal CF7 is used to switch transistor Q3, which allows the Vpp line voltage to be switched between +21.2V and +12.95V. These values allow for 0.2V drop in the following switching transistors, to give the correct Vpp voltage levels of 21.0V and 12.75V at the ZIF socket pins.

So that's a fairly complete rundown on the circuitry in our new EPROM programmer/reader. Next month, we'll cover construction and software details.

Acknowledgements

Our thanks to Glenn Pure for his suggestions and advice. Thanks also to Bill de Rose at Dick Smith Electronics and Bob Barnes of RCS Design. **SC**

SILICON CHIP WebLINK

How many times have you wanted to access a company's website but cannot remember their site name?

Here's an exciting new concept from SILICON CHIP: you can access any of these organisations instantly by going to the SILICON CHIP website (*www.siliconchip.com.au*), clicking on WebLINK and then on the website graphic of the company you're looking for. It's that simple. No longer do you have to wade through search engines or look through pages of indexes – just point'n'click and the site you want will open!

Your company or business can be a part of SILICON CHIP's WebLINK. For one low rate you receive a printed entry each month on the SILICON CHIP WebLINK page with your home page graphic, company name, phone, fax and site details plus up to 50 words of description– and this is repeated on the WebLINK page on the SILICON CHIP website with the link of your choice active. Get those extra hits on your site from the right people in the electronics industry – t he people who make decisions to buy your products. Call SILICON CHIP today on (02) 9979 5644

We stock the full range of fischertechnik robotic kits and models plus spare parts, computer interfaces and control software. Learn about industrial automation and robotics with fischertechnik. See our website for the latest news and FREE software downloads. Don't forget to mention this ad for a 5% discount!

Procon Technology

Tel: (03) 9830 6288 Fax: (03) 9830 6481

WebLINK: procontechnology.com.au

Hifi upgrades & modification products - jitter reduction and output stage improvement. Danish high-end hifi kits - including preamps, phono, power amps & accessories. Speaker drivers including Danish Flex Units plus a range of accessories. GPS, GSM, AM/FM indiv. & comb. aerials.

Soundlabs Group

Syd: (02) 9660-1228 Melb: (03) 9859-0388

WebLINK: soundlabsgroup.com.au

We specialise in providing a range of Low Power Radio solutions for OEM's to Incorporate in their wireless technology based products. The innovative range includes products from **Radiometrix**, the World's leading manufacturer.

TeleLink Communications

Tel:(07) 4934 0413 Fax: (07) 4934 0311

WebLINK: telelink.com.au

We're one of Australia's most innovative electronic equipment suppliers. For over 10 years we've served Australian industry with an extensive range of electronic components and equipment from the world's leading suppliers. We ensure our customers have the best selection and service.

Clarke & Severn Electronics

Tel: (02) 9482 1944 Fax: (02) 9482 1309

WebLINK: clarke.com.au

SPECIALISTS in AUDIO, VIDEO, CD, DATA Media and Multimedia manufacturing & wholesale. We also specialise in **DVD** Production & editing. We can produce Short Run or Bulk CD Audio, CD Rom & DVD projects. Distributor of Emtec (by Basf) TDK, HHB and Quantegy Professional Products.

PRO-COPY

Tel: (08) 9375 3902 Fax: (08) 9375 3903

WebLINK: procopy.com.au

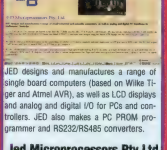

JED designs and manufactures a range of single board computers (based on Wilke Tiger and Atmel AVR), as well as LCD displays and analog and digital I/O for PCs and controllers. JED also makes a PC PROM programmer and RS232/RS485 converters.

Jed Microprocessors Pty Ltd

Tel: (03) 9762 3588 Fax: (03) 9762 5499

WebLINK: jedmicro.com.au

Looking for **GENUINE** Stamp products from Parallax . . . or microEngineering Labs & others?

Easy to learn, easy to use, sophisticated CPU based controllers & peripherals. **See our website for new range of ATOM products!**

MicroZed Computers

Tel: (02) 6772 2777 Fax: (02) 6772 8987

WebLINK: microzed.com.au

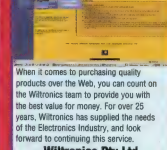

When it comes to purchasing quality products over the Web, you can count on the Wiltronics team to provide you with the best value for money. For over 25 years, Wiltronics has supplied the needs of the Electronics Industry, and look forward to continuing this service.

Wiltronics Pty Ltd

Tel: (03) 9762 3588 Fax: (03) 9762 5499

WebLINK: wiltronics.com.au

Want to start Programming the PIC Micro? Take a look at our PIC Development board. Dedicated to the PIC Micro, We design and manufacture PIC Micro project kits, from the simple to the complex. Our range is constantly growing, so keep checking our web site for updates.

MicroByte Electronics

Tel/Fax: (03) 9378 4288

WebLINK: microbyte.com.au

RCS Radio has available **EVERY PC Board** ever published in SILICON CHIP, EA, ETI and AEM (copyrighted boards excepted). Many late boards are available ex stock, others can be made to order within a few days.Custom & production boards too!

RCS Radio

Tel: (02) 9738 0330 Fax: (02) 9738 0334

WebLINK: cia.com.au/rcsradio

International satellite TV reception in your home is now affordable. Send for your free info pack containing equipment catalog, satellite lists, etc or call for appointment to view. We can display all satellites from 76.5° to 180°.

Av-COMM Pty Ltd

Tel:(02) 9939 4377 Fax: (02) 9939 4376

WebLINK: avcomm.com.au

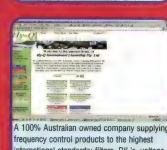

A 100% Australian owned company supplying frequency control products to the highest international standards: filters, DIL's, voltage, temperature compensated and oven controlled oscillators, monolithic and discrete filters and ceramic filters and resonators.

Hy-Q International Pty Ltd

Tel:(03) 9562-0222 Fax: (03) 9562 9009

WebLINK: www.hy-q.com.au

SILICON CHIP REFERENCE GREAT BOOKS FOR

AUDIO POWER AMP DESIGN HANDBOOK
By Douglas Self. 2nd Edition Published 2000
From one of the world's most respected audio authorities. The new 2nd edition is even more comprehensive, includes sections on load-invariant power amps, distortion residuals and diagnosis of amplifier problems. 368 pages in paperback.

PIC Your Personal Introductory Course
by John Morton – 2nd edition 2001
Concise and practical guide to getting up and running with the PIC Microcontroller. Assumes no prior knowledge of microcontrollers, introduces the PIC's capabilities through simple projects. Ideal introduction for students, teachers, technicians and electronics enthusiasts – perfect for use in schools and colleges. 270 pages in soft cover.

NEW NEW NEW NEW NEW NEW

VIDEO SCRAMBLING AND DESCRAMBLING for Satellite & Cable TV by Graf & Sheets 2nd Edition 1998
If you've ever wondered how they scramble video on cable and satellite TV, this book tells you! Encoding/decoding systems (analog and digital systems), encryption, even schematics and details of several encoder and decoder circuits for experimentation. Intended for both the hobbyist and the professional. 290 pages in paperback.

AUDIO ELECTRONICS
By John Linsley Hood. First published 1995. Second edition 1999.
This book is for anyone involved in designing, adapting and using analog and digital audio equipment. It covers tape recording, tuners and radio receivers, preamplifiers, voltage amplifiers, audio power amplifiers, compact disc technology and digital audio, test and measurement, loudspeaker crossover systems, power supplies and noise reduction systems. 375 pages in soft cover.

UNDERSTANDING TELEPHONE ELECTRONICS By Stephen J. Bigelow. Fourth edition published 2001
Based mainly on the American telephone system, this book covers conventional telephone fundamentals, including analog and digital communication techniques. Provides basic information on the functions of each telephone component, how dial tones are generated and how digital transmission techniques work. 402 pages, soft cover.

EMC FOR PRODUCT DESIGNERS
By Tim Williams. First published 1992. 3rd edition 2001.
Widely regarded as the standard text on EMC, provides all the key information needed to meet the requirements of the EMC Directive. Most importantly, it shows how to incorporate EMC principles into the product design process, avoiding cost and performance penalties, meeting the needs of specific standards and resulting in a better overall product. 360 pages in paperback.

GUIDE TO TV & VIDEO TECHNOLOGY
By Eugene Trundle. NEW 3rd Edition 2001
Eugene Trundle has written for many years in *Television* magazine and his latest book is right up to date on TV and video technology. The book includes both theory and practical servicing information and is ideal for both students and technicians. 382 pages, in paperback.

NEW NEW NEW NEW NEW NEW

ANALOG ELECTRONICS
By Ian Hickman. 2nd edition1999.
Essential reading for electronics designers and students alike. It will answer nagging questions about core analog theory and design principles as well as offering practical design ideas. With concise design implementations, with many of the circuits taken from Ian Hickman's magazine articles. 294 pages in soft cover.

NEW NEW NEW NEW NEW NEW

TELEPHONE INSTALLATION HANDBOOK
by Steve Roberts. 2nd edition 2001.
Based mainly on British practice and first published in 1997, this book has much that is relevant to Australian systems as a guide to home and small business installations. A practical guide to installation of telephone wiring, ranging from single extension sockets to PABX, with the necessary tools, test equipment and materials needed by installers.. 178 pages in soft cover.

VIDEO & CAMCORDER SERVICING & TECHNOLOGY
by Steve Beeching (Published 2001)
Provides fully up-to-date coverage of the whole range of current home video equipment, analog and digital. Information for repair and troubleshooting, with explanations of the technology of video equipment. 318 pages in soft cover.

NEW NEW NEW NEW NEW NEW

BOOKSHOP

ENQUIRING MINDS!

ALL PRICES INCLUDE GST

10% OFF! WANT TO SAVE 10%? SILICON CHIP SUBSCRIBERS AUTOMATICALLY QUALIFY FOR A 10% DISCOUNT ON ALL BOOK PURCHASES!

NEW NEW NEW NEW NEW NEW

Power Supply Cookbook

by Marty Brown. 2nd edition 2001.

An easy-to-follow, step-by-step design framework for a wide variety of power supplies. Anyone with a basic knowledge of electronics can create a very complicated power supply design . Magnetics, feedback loop, EMI/RFI control and compensation design are all described in simple language. 265 pages in paperback.

$93

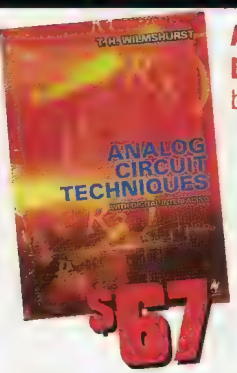

$67

Analog Circuit Techniques With Digital Interfacing

by T H Wilmshurst. Published 2001.

Covers all the analog electronics needed in a wide range of higher education programmes: first degrees in electronic engineering, experimental science course, MSc electronics and electronics units for HNDs. Text is supported by numerousworked examples and experimental exercises. 312 pages in paperback.

NEW NEW NEW NEW NEW NEW

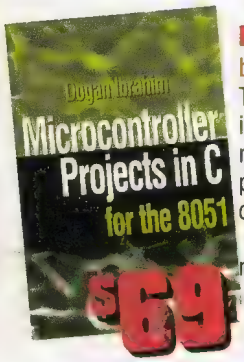

$69

Microcontroller Projects in C for the 8051

by Dogan Ibrahim. Published 2000.

Through graded projects the author introduces the fundamentals of microelectronics, the 8051 family, programming in C and the use of a C compiler. The AT89C2051 is an economical chip with re-writable memory.

Provides an interesting, enjoyable and easily mastered alternative to more theoretical textbooks. 178 pages in paperback.

NEW NEW NEW NEW NEW NEW NEW NEW NEW NEW NEW NEW

Antenna Toolkit

by Joe Carr. 2nd edition 2001.

Together with the CD software included with this book, the reader will have a complete solution for constructing or using an antenna - bar the actual hardware. The software is based on the author's own Antler program, which provides a simple Windows-based aid to carrying out the design calculations at the heart of successful antenna design. Free software CD included. 253 pages in paperback.

$83

NOTE: NEW LOWER PRICE!

Electric Motors And Drives

by Austin Hughes.

2nd edition 1993. **Reprinted 2001.**

VERY POPULAR BOOK NOW BACK IN STOCK WITH A NEW LOWER PRICE!

For non-specialist users – explores most of the widely-used modern types of motor and drive, including conventional and brushless DC, induction, stepping, synchronous and reluctance motors. 339 pages, in paperback.

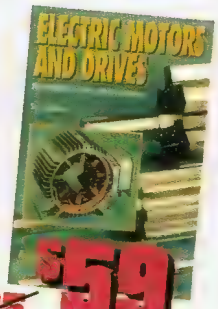

~~$65~~ $59

$59

Interfacing With C

by Howard Hutchings. Revised by Mike James. 2nd edition 2001.

Anyone interested in ports, transducer interfacing, analog to digital conversion, convolution, filters or digital/analog conversion will benefit from reading this book. The principals precede the applications to provide genuine understanding and encourage further development. 302 pages in paperback.

NEW NEW NEW NEW NEW NEW

ORDER HERE

- ❑ ANALOG ELECTRONICS $85.00
- ❑ AUDIO POWER AMPLIFIER DESIGN $89.00
- ❑ AUDIO ELECTRONICS $85.00
- ❑ EMC FOR PRODUCT DESIGNERS $99.00
- ❑ GUIDE TO TV & VIDEO TECHNOLOGY $59.00
- ❑ PIC - YOUR PERSONAL INTRODUCTORY COURSE $46.00
- ❑ TELEPHONE INSTALLATION HANDBOOK $67.00
- ❑ UNDERSTANDING TELEPHONE ELECTRONICS $65.00
- ❑ VIDEO & CAMCORDER SERVICING/TECHNOLOGY $67.00
- ❑ VIDEO SCRAMBLING/DESCRAMBLING $79.00
- ❑ POWER SUPPLY COOKBOOK $93.00
- ❑ M'CONTROLLER PROJECTS IN C FOR 8051 ..... $69.00
- ❑ ANALOG CIRCUIT TECHNIQUES WITH DIGITAL INT $67.00
- ❑ ANTENNA TOOLKIT $83.00
- ❑ INTERFACING WITH C $59.00
- ❑ ELECTRIC MOTORS AND DRIVES $59.00

ORDER TOTAL: $.....

TAX INVOICE

Your Name_____

Address (PLEASE PRINT) _____

_____ Postcode_____

Daytime Phone No. (STD) _____

Email_____@_____

❑ Cheque/Money Order enclosed *OR*

❑ Charge my credit card – ❑ Bankcard ❑ Visa Card ❑ MasterCard

No: | | | | | | | | | | | | | | | |

Signature_____Card expiry date | | | / | |

PLUS P&P (if applic): $..... TOTAL$ AU.....

P&P Orders over $100 P&P free in Australia
AUST: Add $A5.50 per book
NZ: Add $A10 per book, $A15 elsewhere

POST TO: Silicon Chip Publications, PO Box 139, Collaroy NSW, Australia 2097
OR CALL (02) 9979 5644 & quote your credit card details **or FAX TO** (02) 9979 6503

ALL TITLES SUBJECT TO AVAILABILITY. PRICES VALID FOR MONTH OF MAGAZINE ISSUE ONLY. ALL PRICES INCLUDE GST

SERVICEMAN'S LOG

The love job that bounced

Any job which bounces is an embarrassment but never more so than when it involves a "love job". This calls for maximum diplomatic and technical skills – something you learn the hard way. And what do you know about Macrovision?

Don't you just hate it when your wife brings in her best mate's video to fix? It was not a case of consultation, economics or common sense – just the royal command: "please fix it".

Actually, I was lucky to get the "please" bit but even that word was presented more as a command than a request. And it meant, of course, free of charge. Naturally, I agreed – my role in life is to obey without question.

And the fault? Well, of course, "it doesn't work properly; just fix it and don't ask a lot of silly questions."

The item involved was a fairly old GE VTH402 made by Thomson in Singapore. It was a basic no frills poverty-pack VCR and I had to ask enough "silly" questions to determine that the fault was intermittent total failure. Nowadays, the whole unit could be replaced for around $200 or even less.

Removing the cover reveals a conventional mid-deck unit and a switchmode power supply in a small separate cage that plugs into the motherboard. It didn't take long for me to find the two capacitors on the primary side of the transformer – CP007 (10µF 63V) and CP008 (100µF 25V). They were quickly replaced and lo and behold, the set was working.

I put it on test, feeling secure in the knowledge that Mrs Serviceman would be pleased. It all worked perfectly and so the unit was returned to her friend.

Weeks went by and life was pleasant until one day I came in to find the offending object in pride of place on my workshop bench. Mrs Serviceman's face was like thunder. The VCR had failed! Oh no!

I removed the covers and checked it out. This time the set was stone cold dead. Now, as a rule, my policy is to replace the parts with genuine manufacturer's spares or use even better grade components. I had already replaced the two main power supply electros with brand new Hitano units. These are low-leakage 105°C capacitors with slightly higher working voltages than the originals and I was confident that this repair would last.

Initially, I assumed that the new problem was due to the remaining capacitors. I set to and replaced all nine of them but when I fired it up again, it was still dead. Horror of horrors!

There are two ICs in the supply, IP002 (LM393) and IP001 (U4614B). I had the former in stock but replacing it made no difference, so I ordered an IP001 replacement plus a circuit diagram. Fortunately, the helpful people at ATS (the agents) supplied the replacement quickly and sent not only a circuit but also a few notes from the R4000 technical training manual. I fitted the new IC on a 14-pin IC socket but still had low output – voltage was being applied but nothing or very little was coming out.

At my request, ATS faxed me through some more technical support and I checked RP004, RP021, RP018, RP095, DP095, TP091, RP091 and RP092 but these were all OK. I was now working under extreme pressure, with Mrs Serviceman breathing down my neck and a recalcitrant power supply.

It was then that my prayers were answered. A colleague had an old Telefunken VCR lying in his graveyard of uneconomical VCRs to go to the tip. He gave me its old power supply.

Although it was very similar, it wasn't an exact match for the faulty supply. However, when it was plugged in, the set worked just about everywhere except for the display.

This was wonderful – at least I now knew that the rest of the set was OK. In addition, I now had a source of good working parts to transplant into the original supply. I plodded on, getting incredibly technical and grumbling that it would so much cheaper to just give her a new set.

I got nowhere and eventually decided to fish out my ESR (Equivalent Series Resistance) meter. My aim was to check and compare all the electros, one with the other.

I have to admit that I didn't really think this would find anything; after all, they were all new parts. However, when I measured CP008, it gave a reading of 37, which was far too high. A new one should have had an ESR reading of about 0.32.

I fitted yet another capacitor and the set burst into life. I then spend some time setting the VCR up properly (it's quite complex) before putting put it aside to soak test. When I came in the next day, the unit had already gone and Mrs Serviceman was in a much better mood.

So chalk up another win for Bob Parker's ESR meter (for more informa-

Items Covered This Month

- GE VTH402 VCR.
- Teac MV-6080G VCR.
- Technics SV-3700 DAT Recorder.
- Sony KV-EF34M31 TV set (BG03 chassis).
- Sansui AU-9500 stereo amplifier.

tion, check out Bob's website at **www.members.ozemail.com.au/~bobpar/** Alternatively, if you want the kit, it's available from Dick smith Electronics, Cat K7204).

By the way, as an added convenience, I have wired a buzzer into my ESR meter, so that a good capacitor gives an audible sound if it is OK.

Finally, for those who would really like to know, ATS showed me how to vary the RF channel output (to find a slot free from digital co-channel interference). First, you hold down the MENU button for five seconds until "SYS" appears in the display. You then select 5 for Australia (BH) and press confirm. After a few more seconds, the VCR will show the TV receiver RF channel output number which can then be changed from Ch57 to Ch69 using the "+" and "-" keys.

To skip channels, press MENU, select "setup", confirm, select "setup review", confirm, select "program review", confirm, and then put in the program number of the one to be skipped. Press Erase and then exit. Voila!

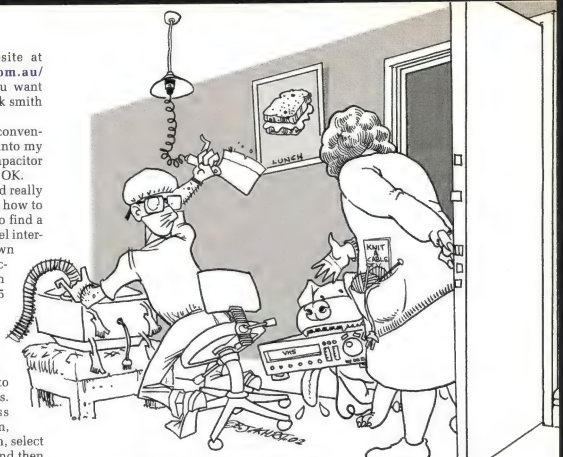

DON'T YOU JUST HATE IT WHEN YOUR WIFE BRINGS IN HER BEST MATE'S VIDEO TO FIX?

Teac MV-6080G

I don't repair many VCRs these days but Mr Mahoney brought in his nearly 3-year old Teac MV-6080G. This is a 6-head model which was doing strange intermittent things. Considering that brand new machines are so cheap, we discussed whether it was worth repairing, even though the set was just out of warranty. The problem was resolved because it matched his Teac TV set and a new one wouldn't.

The symptoms were intermittent no or poor colour, intermittent no functions, buzz in the sound and no tuning. This became worse until finally the set was dead. These troubles were all attributable to 15 electrolytic capacitors in the switchmode power supply. It was now dead because the 16BZ zener diode (DB20) had gone short circuit.

After all these components had been replaced and the job was completed, I noticed that the output of the VCR was on Ch31, the new Sydney TV station from Gore Hill. I changed this to Ch69 and advised Mr Mahoney to connect the unit to his TV set via the AV sockets on both units in order to get good sound and picture.

I thought that that would the end of it but he returned it just two months later, complaining of intermittent no sound on some prerecorded tapes. Fortunately, he had brought one such tape with him.

Well, I played that tape over and over with the VCR connected to my TV set (using both AV and RF connections) but I couldn't fault it. It reached the stage where I could almost recite the sound track word for word.

In the end, I said that it must be the TV set and asked if he could bring that in. Unfortunately, that wasn't practical as it was 68cm 40kg model (Teac CT-M689ST) on the top floor of a duplex with dodgy stairs. It had to be a house call.

When I arrived, I put the offending tape in and played it via the AV inputs. And sure enough, the problem was immediately apparent. I swapped over the AV leads with a new set before taking the back off and soldering any potential faulty joints I could find. However, none of this made any difference.

I then tried tuning the VCR to Ch69 (Mr Mahoney hadn't tried this) and I noticed that while there was no sound in AV mode, there was on RF (note: on hifi VCRs, AV mode gives stereo sound while RF mode is only monaural). I then noticed that the sound came good in AV mode if I unplugged the yellow video lead!

This was ringing bells for me and then the whole thing dropped into perspective. Although this could be a stereo decoder problem, I reckoned that it was more likely to be a Macrovision effect. Macrovision is basically an anti-piracy technique that "modifies" the sync pulses on tapes and DVDs to prevent illegal copying. The problem is that some earlier TV sets cannot properly handle Macrovision. In some cases, the extra pulses that are inserted into the video signal can mute the sound (which is what I figured was happening here) or even turn the TV set off altogether.

At that point, I had to abandon the service call, as I needed to find out what the workaround for this involved.

Back at the workshop I soon discov-

ered a little modification – kit part No. CTM6829MVMOD (available from Speedy Spares) – which consists of a transistor, resistor and capacitor on a small PC board. This little board is connected to microprocessor IC001 in the Teac CT-M689ST TV set via pins 26, 36 and 37. When it arrived, I installed it and Mr Mahoney was at last happy.

DAT recorder

A colleague who specialises in professional and semi-professional sound equipment repairs told me of a frustrating repair he had with a digital audio tape (DAT) recorder.

This was a Technics SV-3700 and it actually played the tapes perfectly. The client complained that, when trying to find a track or skip tracks, the machine would start searching and then lock up completely. It was then necessary to turn the machine off and start again.

However, when tested in my colleague's workshop, the fault was only evident when using the client's tape. If my colleague used one of his own tapes, the machine behaved normally.

So what was the difference between the client's tapes and my colleague's? The only immediately obvious difference was that the client's tapes were older.

Well, my colleague spent a great deal of time testing this, checking that and replacing bits but was getting nowhere. In the end, he had replaced almost every part of the deck (I'm glad that I'm not the only one who suffers from this scenario!). Finally, he replaced the two reel brakes and that fixed the problem.

But why? The client's tapes were worn and that, combined with the worn reel brakes, prevented the machine from reading the control pulses accurately. Before the tape goes into fast forward or rewind, it is moved slowly to enable the microprocessor to identify the tape's location. The new brakes released the back tension more accurately and the tape could be read correctly.

I didn't ask what all this cost and who paid for it.

Dead Sony

A Sony KV-EF34M31 TV set (1999 BG-3 chassis) came in dead but still under warranty. The front-panel LED was flashing and the vertical output transistor Q511 was short circuit; so were Q312, D315 and D310 in the automatic brightness limiter (ABL), which is now a common clue to a faulty horizontal output transformer.

These parts, along with the horizontal output transformer, were replaced. This put the set back into full operation and it was soak tested before going back to its owner.

A month or two went by and then the set was returned to the workshop with another problem. The fault this time was that it would cut out every half hour or so.

To start with, all the safety protection circuits were tested, including Q503, Q604, D505 & D506, among many others. In addition, resistor R615 was checked with an analog multimeter and it read OK. Its value is 0.56Ω and it should really be read out of circuit using a low ohms meter, as the average multimeter isn't sufficiently accurate.

In this case, it's value is very important as the current through this resistor and thus the voltage developed across it is the mechanism that operates a protection circuit based on Q604.

For this reason, the tests were repeated but it was only when R615 was bent over slightly that I noticed that it was slightly discoloured. Measuring it with the correct equipment showed that its value had risen from 0.56Ω to 1Ω. Replacing it fixed the problem.

And now for a complete change of scene. Over the past few months I have collected several servicemen stories (some amateur, some professional) which are well worth passing on to readers. No one person can ever see all the faults and problems which make up the service scene. The broader the coverage the better.

The first story comes from J. B. of Hampton, Victoria, and this is how he tells it.

Past its use-by date?

My next door neighbour put his head over the fence one Saturday morning and asked if I would mind having a look at his brother in-law's amplifier. I had repaired a house alarm some years before for his brother in-law, so maybe I am his de facto serviceman. He lives some distance from Melbourne, so I said "sure, next time he is coming to town, get him to throw it in the boot". An hour or so later, the amplifier arrived: it must have already been in transit!

It was some hours before I had a chance to look at it. It was sitting on a table in his carport and a closer look revealed that it was an old Sansui AU-9500 amplifier of early 70s vintage.

My first reaction was that parts could be hard to get, considering the age of this unit. The owner's response was "Oh that's OK, I have all the parts you need."

It transpired that I was not the first person to look at this amplifier. Apparently, the last person had diagnosed the problem and purchased the necessary parts but didn't have time to fit them. All I had to do was install these parts and the problem would be solved (yeah, right)!

There was some corrosion on the top cover – he lives close to the sea –

which could suggest a problem. And I was getting worried at another level; it was probably an elusive fault that the last person gave up on. Considering the cost of amplifiers these days, I suggested that he might be better off replacing it. Even a cheap one would probably have better specifications than this old unit.

But he wouldn't hear of it. The amplifier had cost him a lot of money when new and had "excellent performance". I tried another approach: "what's wrong with it?", I asked.

"It has some strange noises coming out of the right speaker and it's worse when you turn it on".

I know when I'm beaten. He handed me the owner's manual and I lugged it off home. Fortunately, the manual was quite informative and went into a fair amount of detail on how to connect the unit. And to my surprise, in the back it had a full set of schematics, parts lists and PC board overlays. This was very encouraging, as finding any information on this ancient beast could have been difficult.

The claimed performance was 80W into 8Ω at 0.1% distortion. Looking at the rear panel, there were several inputs with individual level adjustments and a set of links that connected the line out from the preamplifiers to the power amplifiers. I plugged it in and measured the voltage across the speaker terminals. The left channel was very close to 0V but I had several hundred millivolts on the right channel and its level was all over the place.

I had no doubt that this was the noise he referred to, even though I did not have any speakers connected at the time. Since I had a simple means of isolating the preamplifier, a quick swap left to right confirmed the noise was still in the right power amplifier. Removing the links and shorting the input had no effect.

The schematic indicated a fairly conventional amplifier. This shouldn't take too long, so I whipped off the covers and jumped in.

Inside was quite a surprise. It was of modular construction, with each power amplifier in its own metal can held in by two screws. The PC board slid into the can and had a connector mounted on the chassis, so all I had to do was slide it out and I had the module sitting on the bench.

I first checked and cleaned the connectors but with no benefit. I then swapped the two modules and the fault went with the board, so the problem was definitely in the power amplifier itself. My next instinct was to check C801, a 2.2µF 50V electrolytic on the input to the power amplifier. I thought that this capacitor may have dried out but it tested OK and replacing it made no difference. I then checked the output of transistor pair TR801 and TR803 and struck it lucky; TR801 was the source of the noise.

I removed TR801, a 2SA726W, planning to try a substitute. It was then that I remembered the bag of parts I had been given. Unfortunately, there was nothing that looked like a 2SA726W. I substituted TR801 from the left channel and that cured the fault; all I needed was a new TR801.

The next day I rang one of my usual suppliers to check the price and availability on a 2SA726W. He said that it wasn't listed.

"What's it out of?"

"A Sansui AU-9500, probably early 70s vintage", I replied. There was a long pause: "Don't you have a rubbish bin?"

I made a few more phone calls but still no luck; only amazement that I was working on an amplifier of this age. I got onto the Internet and after some searching, found an NTE substitute. I grabbed a couple on the way home and wasted no time fitting one, The replacement worked well and I was surprised that there was very little adjustment required anywhere – everything was pretty well spot on.

I tested it with a dummy load and had a look around with the CRO – all was nice and quiet. I had planned to fit a pair of transistors but I could not fault the operation, so I decided to just replace TR801.

Hooking the unit up to a CD player and some decent speakers resulted in a creditable performance. A couple of days later, I thought I heard some low-level noise in the left channel for a few seconds after switch on. This turned out to be TR803 (Sansui used the same identification numbers for the left and right channels), the other transistor in the pair. Replacing this cured the problem.

I am not sure why the transistors had become noisy but the leads looked like they had originally been silver plated and these were very black. Did this mean that some sort of corrosion had been able to enter the body of the encapsulation?

That was several months ago now and I am told that the owner is very happy with the results. Was it worth it? It turned out to be a minor repair and I like a challenge but then I don't have to run a business. **SC**

Using Linux to Share an Optus Cable Modem Internet Connection

Pt.1: Getting the Cable Modem Working

A Linux box connected to a cable modem is ideal for sharing an Internet connection between PCs on a small local area network (LAN). It's generally faster than using Windows' Internet Connection Sharing and you don't need fancy hardware to run Linux. And it's easy to set up.

By JOHN BAGSTER

This article describes my adventures with an Optus@Home cable modem and RedHat 7.0 Linux, but the principles are similar for Bigpond Advance and for other variations of Linux. You do not need to be a rocket scientist to get a cable modem going with Linux but you do need to be comfortable with installing Linux and basic things like typing files, editing them, creating folders (directories) and shutting down, etc.

You don't need fancy hardware for a Linux gateway and just about any old PC (Pentium 133MHz or better) will do the job. So if you have an old PC that's gathering dust because you haven't the heart to throw it out, it can be resurrected and pressed into service.

If you don't have one, scrounge it – there are lots of old machines "out there". It only has to have 64MB of RAM and a 1GB hard drive, although you might be able to get away with 32MB of RAM and a 540MB hard drive at a pinch.

To make scrounging even easier, you don't even need a monitor or a keyboard once you have it all set up. Nor are CD-ROM and floppy disk drives necessary once Linux is installed. You will need to have all these items for installation and setting up though – perhaps temporarily borrowed from another machine.

You also need two network cards – one to connect to the cable modem and the other to connect to your network hub. Speed isn't an issue here and 10MB cards, even ISA types if you can get them going with Linux, will do the job. However, PCI plug and play network cards are easier to get going, as Linux is very good at detecting these.

Installing Linux

How many of the Linux packages do you need to install for a gateway and firewall? Not many actually and in fact, the less you install, the better. That's because the less stuff you have installed, the harder it will be for someone to hack in and wreak havoc. For example, you don't normally require any web, ftp or email servers, nor do you require any games. In fact, you don't even need the GUI (graphical user interface) – either Gnome or KDE.

All you require is basic networking, the DHCP client (ie, ***dhcpcd*** – not to be confused with ***dhcpd***), *named* (part of ***bind***) and the DHCP server (ie, ***dhcpd***). Both ***named*** and ***dhcpd*** will make life easier but are not essential.

And that is all you really need. My installation took up about 500MB and I think I installed too much!

By the way, if you have an existing Linux PC you could configure that as a gateway and firewall, but for security reasons I would advise against it. Leave it alone and set up a separate Linux PC just as a gateway and firewall.

Note that the following article is specific to RedHat Linux. The procedure should be similar for other distributions although some file names may be different of the files may be installed in different folders.

To set up the system, you must be logged in as root so be very careful! User root can do just about anything and a wrong command can totally destroy a Linux installation.

During installation, Linux will identify your two network (ethernet) cards as eth0 and eth1. We'll assume here that eth0 is connected to your internal (Windows PC) network (ie, to the hub) and that eth1 is connected to the cable modem. However, it doesn't matter if they are the other way around – just swap them in this article.

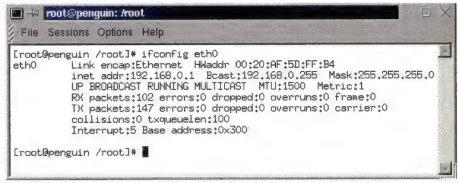

Fig.1: you can test the network card in a Linux box by entering the command *ifconfig eth0* at a terminal Window. Additional network cards can be tested in the same manner; eg, *ifconfig eth1*.

When setting up, the card for the internal network is given a fixed IP address, while the external network card (ie, the card that connects to the cable modem) is assigned a dynamic IP. I used a fixed IP of 192.168.0.2 and the PC was named "firewall" but you can change these to suit yourself.

When installing Linux, it's just a matter of making sure that "Configure with DHCP" is not set for eth0. You then feed in the IP address (192.168.0.2), subnet mask (255.255.255.0), the network address (192.168.0.0), and the broadcast address (192.168.0.255).

Don't worry about the primary, secondary and tertiary DNS addresses or the gateway address.

Conversely, "Configure with DHCP" must be set to "on" for eth1, as the cable modem supplies the IP address. Set both cards to "Activate on boot" and select the option to boot in text mode (choose graphical only if you decide to install the GUI). Don't worry if you get the networking information wrong or are not sure what to enter during installation, as you can check and fix it later. I have done about half a dozen Linux installations and have finished up with the same number of incorrect network configurations (usually I forget about the second network card and it isn't enabled by default)!

Once setup is complete, check that dhcpcd has been installed (you will not get a cable modem going without it). It will more than likely be in the ***/sbin*** directory and there should be an ***/etc/dhcpcd*** directory as well.

Now check on ***named*** and ***dhcpd***. These will probably both be in the ***/usr/sbin*** directory, and will also have scripts of the same name in the ***/etc/rc.d/init.d*** directory. If any of these are missing you can install the appropriate rpm (Red Hat Packet Manager file) and any of its dependents. RedHat 7.0 has ***dhcpcd*** in the dhcpcd rpm, ***named*** in the bind rpm and ***dhcpd*** in the dhcp rpm.

Checking the network cards

Redhat 7.0 is very good at finding network cards so the installation should have found both without any trouble – especially if they are both PCI types. Note, however, that earlier versions (eg, 6.2) weren't very good at finding a second card. If one of the network cards hasn't been detected (or you think it hasn't), take a look at ***/etc/modules.conf***. It should look something like this:

```
alias eth0 tulip
alias eth1 pcnet32
alias parport_lowlevel parport_pc
alias usb-controller usb-uhci
```

What you are looking for here are entries for both eth0 and eth1 (note: the driver modules will probably be different on your PC). If they are both there, then both network cards have been found. If not, try shutting down and restarting, especially if only eth0 is there. The second card may then be detected on restart.

If it isn't, then you will either have to work out which module(s) are required and manually load them or try a different type of card. There's plenty of information on this in the "Ethernet-HowTo".

In the above example, "tulip" and "pcnet32" are the modules that are loaded for the particular network cards. They are the equivalent of device drivers in Windows. Unfortunately, they are usually not much

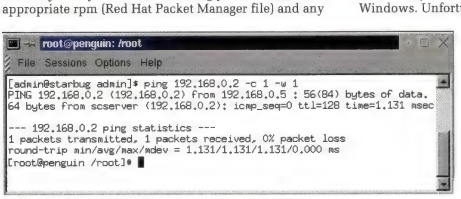

Fig.2: you can test the local network by pinging the IP address of each of the Windows PCs in turn – eg, ping 192.168.0.2 -c 1 -w 1. The "-c" switch sets the number of pings, while the "-w" switch sets the timout.

help in identifying which card is which. In my case, eth0 is a PCI Netgear type, while eth1 is an on-board AMD type – so "tulip" and "pcnet32" by themselves don't help with identification!

If your two cards are different and you don't know which is which, then (provided they are PCI cards) you can type

cat /proc/pci|more

in a console window. This will identify the cards and list their IRQ assignments. If you then type

cat /proc/interrupts

the IRQs will tell you which is eth0 and which is eth1.

If you can't get Linux to find the second card you can edit **/etc/modules.conf** and add the line for the second card yourself. The "Ethernet-HowTo" lists the driver modules for a range of ethernet cards.

If you don't know what module to use, use two identical ethernet cards and insert a line for eth1 that uses the same module as eth0.

Checking network setup

Once both network cards are recognised, you can check the network configuration. At this stage, you do NOT want the PC connected to the cable modem. If you are feeling lucky you can use Linuxconf to check the network configuration and hope that it works. Linuxconf never works for me so I prefer to check the appropriate files manually.

First, there must be a configuration file for each network card. If they don't exist, you will have to create them using a text editor (eg, vi). One or both of these files may be missing, depending on what you did during the installation. They are: ***/etc/sysconfig/network-scripts/ifcfg-eth0*** and ***/etc/sysconfig/network-scripts/ifcfg-eth1*** respectively.

Assuming that eth0 is connected to your internal network, its file should look like this:

```
DEVICE=eth0
BOOTPROTO=static
BROADCAST=192.168.0.255
IPADDR=192.168.0.2
NETMASK=255.255.255.0
NETWORK=192.168.0.0
ONBOOT=yes
```

The order of the lines is not important but note that all text on the lefthand side of the "=" symbols must be in upper case. Conversely, the letters on the righthand side must be in lower case, as shown. In addition, all text on the righthand side can be in quotes (but this isn't necessary).

The **BOOTPROTO=static** line tells Linux that this network card has fixed network parameters. This line can be left out as this is the default anyway. The **ONBOOT=yes** line tells Linux you want the network card to be configured when networking is started (ie, when the PC is started).

The ***/etc/sysconfig/network-scripts/ifcfg-eth1*** file should look like this:

```
DEVICE=eth1
BOOTPROTO=dhcp
DHCP_HOSTNAME="ab1234567-z"
ONBOOT=yes
```

The rules governing the order, case, quotes, etc, are the same as for eth0. The text in quotes on the **DHCP_HOSTNAME** line is the name that Optus has assigned you. If you currently have a Windows PC connected to your cable modem, you can discover this name by right-clicking Network Neighborhood (or My Network Places), selecting Properties from the drop-down menu and then clicking on the Identification tab.

As far as I know, this name is no longer required but it can't hurt to include it.

The **BOOTPROTO=dhcp** line tells Linux that the configuration addresses for this network card will be assigned to it – in this case by the ISP. This is why this file does not have any IP addresses, etc included. It is the equivalent of selecting "Assign An IP Address Automatically" in the TCP/IP Properties dialog box of Network Neighbourhood on a Windows PC.

When RedHat Linux sees the **BOOTPROTO=dhcp** line, it attempts to run the ***/sbin/pump*** program to do the work. If this program starts without an error then well and good. Alternatively, if it fails, then ***/sbin/dhcpcd*** is run.

The problem with this is that ***/sbin/pump*** does not work properly with cable modems! However, the ***/sbin/dhcpcd*** program does work, so the ***/sbin/pump*** program has to be stopped from starting in the first place.

The easiest way of doing this is to change the permissions of ***/sbin/pump*** to 644. How do you do that? Easy – just type

chmod 644 /sbin/pump

(eg, in a terminal window) and press <Enter>. This will change its file permissions from **-rwxr-xr-x** to **-rw-r—r—** which means that it cannot be executed as a program

You will now see a pump protection error message when the Linux networking starts but this doesn't matter. The important thing is that ***pump*** cannot run and hence ***dhcpcd*** will instead. You could be a bit more drastic and delete ***/sbin/pump*** if you wanted to, of course.

IP forwarding

At this stage, Linux still isn't going to talk to the Internet because the Internet does not use internal network addresses such as 192.168.0.x. There is a way around this, though. Linux has the ability to forward Internet addresses from your internal network to an external network (this is where the "gateway" part

comes in). However, this is disabled by default so we have to enable it.

RedHat Linux has a file called */etc/sysctl.conf* and you need to edit this to enable IP forwarding. The default file looks like this:

```
# Disables packet forwarding
net.ipv4.ip_forward = 0
# Enables source route verification
net.ipv4.conf.all.rp_filter = 1
# Disables automatic defragmentation (needed for
# masquerading, LVS)
net.ipv4.ip_always_defrag = 0
# Disables the magic-sysrq key
kernel.sysrq = 0
```

You will have to edit this file and also add some extra lines so that it looks like this:

```
# Enables packet forwarding
net.ipv4.ip_forward = 1
# Enables source route verification
net.ipv4.conf.all.rp_filter = 1
# Enables automatic defragmentation (needed for
# masquerading, LVS)
net.ipv4.ip_always_defrag = 1
# Disables the magic-sysrq key
kernel.sysrq = 0
# Extra lines added:
# Enables dynamic-ip address hacking in IP MASQ
# (needed for dhcp)
net.ipv4.ip_dynaddr=1
#The following enables the LooseUDP patch which
# some Internet-based games require
# If you are trying to get an Internet game to work and
# you have set it up to the best of your ability without
# it working, include this option. Leave it commented
# out unless required.
#net.ipv4.ip_masq_udp_dloose=1
```

I have not used the last line in my file. Apparently it can cause security problems, so don't remove the "#" (which comments the line out) unless you have to. My son plays lots of Internet games and so far it has not been necessary to include it.

If you are using a different Linux distribution, this file may not exist. In that case, IP forwarding can be enabled by creating your own script file as follows and including it somewhere in the system start-up:

```
echo "1" > /proc/sys/net/ipv4/ip_forward
echo "1" > /proc/sys/net/ipv4.conf.all.rp_filter
echo "1" > /proc/sys/net/ipv4/ip_always_defrag
echo "1" > /proc/sys/net/ipv4/ip_dynaddr
# if you require it:
#echo "1" > /proc/sys/net/ipv4.ip_masq_udp_dloose
```

If you wish, these lines could be added to the end of the */etc/rc.d/rc.local* file, since this file is executed each time the computer boots.

That said, editing *sysctl.conf* is the preferred method of enabling IP forwarding in RedHat linux, as ip_forward and ip_always_defrag are both set to 0 when you shut down the network. If you have enabled these by editing *sysctl.conf*, then they will be set to 1 again when you restart the network. However, if you use a separate start-up script, then this would also have to be run after restarting the network.

Testing the network setup

If you know which network card is eth0 and which is eth1 then you can skip this section.

Subscribe & Get This FREE!*

*Australia only. Offer valid only while stocks last.

THAT'S RIGHT! Buy a 1- or 2-year subscription to *SILICON CHIP* magazine and we'll mail you a free copy of *"Electronics TestBench"*, just to say thanks.

"Electronics TestBench" is a valuable 128-page collection of the best test equipment projects from the pages of Australia's only consumer electronics magazine.

By subscribing to SILICON CHIP you'll save money on the news-stand price. And we'll give you a 10% discount on any other SILICON CHIP merchandise (books, etc).

Contact: Silicon Chip Publications, PO Box 139, Collaroy, NSW 2097
Phone Orders: (02) 9979 5644 Fax Orders: (02) 9979 6503 Email Orders: office@silchip.com.au

At this stage, eth0 should be configured but eth1 won't be because the cable modem hasn't been connected to it (which means that the DHCP parameters cannot be retrieved). Now type

/sbin/ifconfig eth0

and check that eth0 is there with its correct IP address, etc – see Fig.1. If not, configure it by typing

/sbin/ifup eth0

This done, type

/sbin/ifconfig

again to see if it is there. If it isn't, go back and check ***/etc/sysconfig/network-scripts/ifcfg-eth0*** and also ***/etc/modules.conf***. You could also type

cat /proc/interrupts

to make sure the eth0 card shows up in that. If it doesn't, then you have a hardware problem or Linux does not know about the particular card you are using.

Once eth0 is showing up in ifconfig, install network cards into your Windows PCs and assign them fixed IP addresses; eg, 192.168.0.2, 192.168.0.3, etc – see Fig.3 (this is just temporary – we'll show you how to dynamically assign IP addresses by setting up DHCP on the Linux box next month). You can then test whether or not the network is working by attempting to ping the Windows boxes from your Linux box; ie:

ping 192.168.0.x -c 1 -w 1

where "x" is the number assigned to an individual Windows PC.

If the network is working, you should get a response similar to that shown in Fig.2. If you cannot ping your Windows PCs, check the cabling, IP addresses, etc.

Testing the modem

Once you have identified the network cards in your Linux box, you can test your cable modem. A word of caution here: at this stage, your Linux PC has no firewall and is very vulnerable to nasty people on the Internet who like to search out and destroy things. An unprotected Linux PC is an answer to their prayers because it is capable of doing so many things; eg, a Linux PC can operate as a server, depending on what you have installed.

When you do plug in the cable modem, leave it plugged in just long enough to test it. You should only need to have it connected for a minute at the most.

OK, you can now connect your modem to eth1 by transferring the cable over from your Windows PC. If you need to use a different cable, it must be a straight through type (ie, the type you would use to connect a PC to a hub or switch) – do not use a crossover cable.

The next part is very important! You must now switch off the power to your cable modem and then switch it back on again after all its indicator LEDs go out. You can do this by either switching it off at the power point and then back on or by unplugging the power cable from the back of the modem and then plugging it back in again.

Note that simply switching the modem off via the switch on the front of it is not good enough (I wasted days trying to get it to work because of this).

The reason that the power must be removed briefly is that every network card has what is called a MAC (Media Access Control) address which should be unique. The cable modem remembers this address and will refuse to work if it changes! Removing the power causes the modem to lose its memory and it will load the address again when power is reapplied. Of course, the address will now be different because it is connected to a new network card.

The next step is restart the network on your Linux PC by typing:

/etc/rc.d/init.d/network restart

If you are enabling IP forwarding via a start-up script (rather than via sysctl.conf), you will have to run that script as well. Alternatively, you can reboot the PC.

You should see a message that /sbin/pump failed to start, which is correct. If the command takes a minute or so and times out, try removing and reapplying power to the cable modem again. Now try typing **/sbin/ifup eth1** again. If it still doesn't work, then start looking for hardware problems.

For example, you could try swapping the eth0 and eth1 configuration files and plug the modem into the eth0 card if you know that eth0 works. Don't forget to remove the power to the modem and reapply it again. After restarting the network (**/etc/rc.d/init.d/network restart**), check that eth0 "sees" your modem (**/sbin/ifup eth0**).

Once the cable modem has been recognised, try pinging an Internet site. You should get a response. Hit <Ctrl>-C to stop a Linux box from pinging.

Bigpond wrinkles

If you are using Bigpond, there is one more thing you must do to get full Internet access. We'll get to that shortly. However, you can test that the connection is working properly by typing:

ftp dce-server

If it is working, you should get an ftp login prompt. Hit <Ctrl>-C to exit from this prompt.

Testing the Optus connection

You can test the Optus connection by typing:

cat /etc/resolv.conf

The response should look something like this:

Itching To Go? – Modify The Silicon Chip Firewall

If you're really itching to start using your Linux box, you can use a slightly modified version of the firewall found in the June 2001 issue of SILICON CHIP. This involves removing the following lines from the firewall as these are for a dialup modem, not a network card and cable modem:

```
# Set telnet, www, smtp, pop3 and FTP for minimum delay
/sbin/ipchains -A output -p tcp -d $ANY 80 -t 0x01 0x10
/sbin/ipchains -A output -p tcp -d $ANY 22 -t 0x01 0x10
/sbin/ipchains -A output -p tcp -d $ANY 23 -t 0x01 0x10
/sbin/ipchains -A output -p tcp -d $ANY 21 -t 0x01 0x10
/sbin/ipchains -A output -p tcp -d $ANY 110 -t 0x01 0x10
/sbin/ipchains -A output -p tcp -d $ANY 25 -t 0x01 0x10
# Set ftp-data for maximum throughput
/sbin/ipchains -A output -p tcp -d $ANY 20 -t 0x01 0x08
```

You also need to change all references to ppp0 in the firewall to either eth1 or eth0 (depending on the card that's connected to your cable modem).

In addition, if you have edited sysctl.conf to enable IP forwarding, etc, you can also remove the relevant lines from the start of the firewall (although it won't matter if you don't).

Finally, because named isn't running (yet), you will have to manually configure your Windows's PCs with the nameserver IP addresses found in */etc/resolv.conf*. This simply involves adding those IP addresses into the DNS search list of the TCP/IP properties dialog box of each Windows PC. You also have to enter the gateway address (ie, 192.168.0.1) into each Windows PC. Fig.4 & Fig.5 below show how this is done.

Further detailed information on manually configuring your Windows PCs can be found on pages 19-20 of the May 2001 issue of SILICON CHIP.

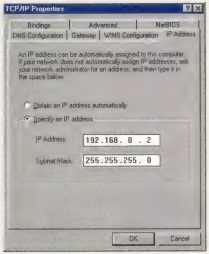

Fig.3: each Windows machine is given a unique IP address while the subnet mask is always the same; ie, 255.255.255.0.

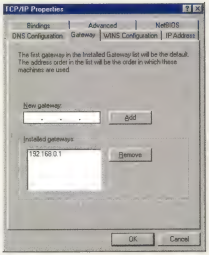

Fig.4: the IP address of the Linux gateway (192.168.0.1) must be entered in the Gateway dialog box. Do this for all Windows PCs.

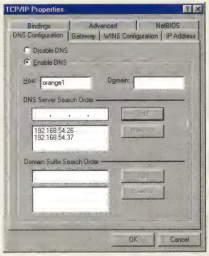

Fig.5: the IP addresses of the nameservers must also be entered. You get these numbers from the *resolve.conf* file on the Linux box.

```
domain qld.optushome.com.au
nameserver 203.2.75.132
nameserver 198.142.0.51
search qld.optushome.com.au
```

The addresses may be different and the "qld" may be "nsw" or "vic" or whatever (depending on your state) but it should look something like the above. Fairly obviously, the domains, etc, will be different for a Bigpond connection.

Shut it down

Now that you have proved that the cable modem works with your Linux PC you should shut down the

eth1 network. Do this by typing **ifdown eth1**, then unplug the modem and reconnect it to your Windows PC. Don't forget to remove and reapply the power to the modem again so that it picks up the network card MAC address for the Windows PC!

Getting Bigpond going

If you are using Optus@Home, that is all you have to do to get the cable modem talking to Linux. However, if you are using Bigpond Advance, you also need to download a utility called bpalogin (use a search engine to find suitable download sites) and install it.

Once it's installed, edit ***/etc/bpalogin.conf*** and insert your username and password as follows:

```
debuglevel 1
username myusername
password mypassword
```

You now place ***bpalogin*** in your system startup so that it starts after eth1. The command to start it is:

```
/path/bpalogin -c /etc/bpalogin.conf
```

where ***/path*** is the directory bpalogin resides in (probably ***/usr/bin*** or ***/usr/sbin***).

By the way, I haven't used Bigpond Advance and hence have not installed or configured bpalogin. Apparently, it has a startup script supplied that you can use. I also assume that bpalogin runs as user root. For security, since /etc/bpalogin.conf contains your account and password, you should protect it so that only root can read it:

```
chmod 400 /etc/bpalogin.conf
chown root /etc/bpalogin.conf
chgrp root /etc/bpalogin.conf
```

Check out **http://www.luv.asn.au/overheads/broadbandhowto/x54.html** for more information on configuring Bigpond Advance. For more information on bpalogin, go to **http://www.linuxathome.net/bpalogin.php**.

Now you can relax with the knowledge that it is all going to work! Pt.2 next month will describe how to set up a name server and a DHCP server on your Linux box – this will make it really easy to configure your Windows PCs. Pt.3 will show you how set up a secure firewall, while Pt.4 will have information on firewall logging and using the Linux box without a keyboard, monitor or mouse.

There's even information on how to shut Linux down in an orderly fashion just by pressing the power switch – provided you have an ATX power supply, that is! **SC**

Iptables Is Taking Over From Ipchains

RedHat Linux 7.0 and later versions include an updated replacement for *ipchains* called *iptables*, although *ipchains* is still installed (and RedHat still defaults to the *ipchains* script in */etc/rc.d/init.d*).

What if you want to run *iptables* instead? Fortunately, you don't have to understand *iptables* to create your own firewall. Many Linux distributions now include graphical firewall configuration utilities, or you can use a third-party configuration utility; eg, Firestarter (note: Firestarter works with both *iptables* and *ipchains*).

Alternatively, you could download and modify an *iptables* firewall from the net to suit your own requirements. Two possible starting points are:

www.spodzone.org.uk/packages/secure/iptables.sh
www.amber.co.uk/files/iptablesrc

Don't forget to change any references to ppp0 (which is for a dial-up modem) to eth1 (or eth0) if using a cable modem.

Finally, you should turn off all unwanted services on your Linux box. Refer to the Linux articles in the May, June, August & September 2001 issues of SILICON CHIP for details on improving security.

Here's how to insure your investment in SILICON CHIP

Are your SILICON CHIP copies getting damaged or dog-eared just lying around in a cupboard or on a shelf? Can you find that particular issue you need to refer to?

Keep your copies safe, secure and always available with SILICON CHIP binders.

Available Aust. only. Prices include GST. Order direct from SILICON CHIP: phone (02) 9979 5644 or fax (02) 9979 6503.

Jaycar ELECTRONICS

NOVEMBER BIRTHDAY SALE

10MHz Velleman Personal LCD Handheld Oscilloscope

NEW PRODUCT

The Velleman Personal Oscilloscope is a complete portable unit at the size and cost of a good multimeter. It's an ideal oscilloscope for hobbyists, students, service people, automotive applications and general development. Features include a high contrast LCD with wide viewing angle; full automatic setup for volt/div & time/div; true RMS and dB measurements, screen hold function; low battery detection and auto power off. Ask in store for full details.

Cat. QC-1916 $349

Four Port USB-2.0 High Speed Hub

NEW PRODUCT

This high-speed USB hub conforms to the USB 2.0 specification and will operate at speeds up to 480Mbps. Powered by its own plug pack it can supply full power to downstream devices.

Cat. XC-4821 $79.95

USB Compact Flash & Smart Media Card Reader

NEW PRODUCT

Exchange data between your computer (Mac or PC) and your digital camera, MP3 player, PDA or another computer with this handy card reader.

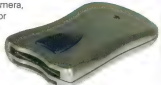

Cat. XC-4851 $49.95

Infra Red Wireless Stereo Headphones

NEW PRODUCT

The headphones feature a volume control, power & charging indicators, on/off switch and plush, fabric covered cups that fit securely around your ears to provide a rich bass response and long term comfort. Includes rechargeable batteries.

Cat. AA-2051 $79.95

3 Way TV Game Selector Switch with S-Video

NEW PRODUCT

Handles both RCA and S-Video connectors and also features a headphone output. No power is required and switching is easy using the large slide switch.

- 1.5mt RCA lead included
- Size: 200(W) x 30(H) x 85(D)mm

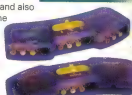

Cat. AC-1669 $24.95

SurfCam USB Web Camera

NEW PRODUCT

Use this Webcam in the office for Video Conferencing, or at home, to send pictures and video to your friends via email. It uses a 100K pixel colour CMOS sensor, with auto exposure and white balance for optimum performance under varying light conditions. Supplied with editing software.

Cat. QC-3220 $49.95

6-Way Individually Switched Power Outlet with Mains Filter & Dual Telephone Line Protection

NEW PRODUCT

Features recessed sockets to prevent potentially dangerous contact with partially exposed mains connectors. It also includes dual telephone line filtering for modems/faxes, and separate LED surge and power indicators. Each mains socket is individually switched with illuminated rocker switches. Overload protection and a circuit breaker are also included.

Cat. MS-4020 $69.95

NEW PRODUCT

Similar to MS-4020, though each socket is spaced apart so that plug packs can be used in every socket if required. Recessed sockets stop plug packs working free if the board is mounted vertically.

Cat. MS-4022 $64.95

Stereo Backphones

NEW PRODUCT

Unlike traditional headphones, these lightweight headphones clip over your ears and comfortably rest on the back of your neck, making them ideal for sports activities like jogging, cycling, skateboarding, etc.

Cat. AA-2050 $14.95

Monitor Headphones with Swivel Ear Cups

NEW PRODUCT

These offer superior comfort combined with excellent full range sound quality. Suited for home Hi-Fi or DJ use. With 90° swivelling ear-cups to allow the DJ to keep one ear "on the mix" and the other open to hear the sounds of the club. Features a generous 2.9 metre lead, gold plated 3.5mm plug and gold-plated 3.5mm to 6.5mm adaptor.

Cat. AA-2052 $45.00

Multimedia Stereo Earphones with Inline Microphone

NEW PRODUCT

Suitable for Notebook Computers, PDA's, Digital Recorders and PC's, these earphones are comfortable and lightweight. Black leather pouch supplied.

Cat. AA-2029 $19.95

Stereo Camcorder Microphone

NEW PRODUCT

Improve the sound quality of your home video recordings with this uni-directional stereo microphone. The mic has a standard camera mount base and a companion stand that enables the unit to be used as a table microphone as well as a camera mounted mic.

Cat. AM-4083 $49.95

OPENING SOON

NEW STORE IN BROOKVALE

549 Pittwater Rd. Brookvale. NSW.

FREECALL FOR ORDERS

1800 022 888

New Products - please check that they have arrived in stock

Please phone ahead and check that the new products you are after have arrived in your store before driving across town.

ANEX JAPANESE MADE HAND TOOLS

The ANEX range of high quality hand tools are manufactured in Japan and made from the finest steel. The larger screwdrivers feature a one piece stainless steel shaft & blade and have comfortable, easy grip handles. These are excellent tools and may cost a little more, but you will still be using them, long after you have forgotten the price!

ANEX Screwdrivers

NEW PRODUCTS

These amazing screwdrivers are made in Japan from high-quality stainless steel and feature moulded handles which glow in the dark and give you great grip for torque.

Slotted

Cat.	Tip Width	Blade Length
TD-2093	5.5mm	75mm
TD-2094	6mm	100mm

Phillips

Cat.	Tip Size	Blade Length
TD-2095	1	75mm
TD-2096	2	100mm

Cat. TD-2093 $12.95

Cat. TD-2094 $13.95

Cat. TD-2095 $12.95

Cat. TD-2096 $13.95

ANEX Precision Screwdriver Set

NEW PRODUCT

6 piece precision screwdriver set in a quality plastic case. Six mounting holes at the top of the case allow the screwdrivers to stand vertically for quick selection.
Each driver is colour coded and has a swivelling head. Made in Japan

Cat. TD-2101 $19.95

ANEX Pocket Pal Screwdriver

NEW PRODUCT

Designed for use on spectacles, this handy screwdriver has a reversible No.00 Philips & 1.8mm slot driver and a box wrench, which suits both 2.2mm Hex screw and 2.2 - 2.5mm
Made in Japan

Cat. TD-2098 $9.95

ANEX 4 in 1 Electrical Screwdriver

NEW PRODUCT

Features a reversible driver with 1, 2 & 3mm Philips and a 6mm slot. Round rubber grip handle which fits the palm of your hand for extra grip.
Made in Japan

Cat. TD-2097 $14.95

Fuse Gang Blocks

NEW PRODUCTS

Natural Brass contacts riveted to a fibreglass filled nylon board. Ideal for Automotive, Aircraft, Marine and many low voltage applications. Accepts 3AG fuses.

4 Way, Base 57 x 60mm
Cat SZ-2006 $7.95
6 Way, Base 57 x 90mm
Cat SZ-2007 $9.95

4 and 6 way with double bus bar. One bus connected to one side of the fuse clip. You could wire to your application and then return to the other busbar for say, ground.

4 Way, Base 83 x 75mm
Cat SZ-2009 $13.95
6 Way, Base 83 x 100mm
Cat. SZ-2010 $16.95

USB Data Extension Cable

NEW PRODUCT

Extend the length of your USB device by an additional 5-metres (16-feet) using this Active USB Repeater Cable. It meets USB Electrical and Timing specifications.

Cat. XC-4839 $34.95

Three in One Party Pack

Includes a strobe light adjustable up to 10 flashes per second, a 10cm diameter mirror ball mounted on a silver body shaped base and a 12" UV Blacklight. Powered by 8 x AA batteries (not included) or 12VDC 500mA.

NEW PRODUCT

Cat. SL-2979 $69.95

ANEX 5 Piece Cellular Phone Toolkit

NEW PRODUCT

High quality toolset with specialised drivers for servicing cellular phones and similar precision instruments.
Made in Japan

Cat. TD-2100 $49.95

ANEX Screwdriver Set in Pouch

NEW PRODUCT

A quality screwdriver set in a durable, stitched vinyl pouch.
•Sizes: 000, 00, 0 & 1 Phillips and 1.8 & 3mm Slotted, on 3 reversible bits
Made in Japan

Cat. TD-2102 $39.95

ANEX Allen Key Driver Set in Pouch

NEW PRODUCT

A quality Allen Key set in a durable, stitched vinyl pouch.
Made in Japan

Cat. TD-2103 $39.95

ANEX Torx Driver Set in Pouch

NEW PRODUCT

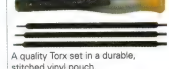

A quality Torx set in a durable, stitched vinyl pouch.
Made in Japan

Cat. TD-2104 $39.95

ANEX Precision Screwdriver Keychain

NEW PRODUCT

Key ring mounting screwdriver with reversible No.00 Phillips & 1.8mm slot and box wrench, which suits both 2.2mm Hex screw and 2.2 - 2.5mm Hexlobu screws. Made in Japan.

Cat. TD-2099 $9.95

USB Flash Memory

NEW PRODUCTS

One of the most portable storage devices yet! Simply plug into a USB port and you have a removable data storage medium. No drivers are required (except for Win 98/SE) Lightweight and portable. Ask in store for details.

32Mb	Cat. XC-4763	**$99.95**	NEW
64Mb	Cat. XC-4764	**$139.95**	NEW
128Mb	Cat. XC-4765	**$189.95**	NEW

Screwdriver Helper

NEW PRODUCT

Just apply a drop or two of Screwdriver Helper to instantly help remove or tighten screws with stripped heads. This unique formula dramatically increases torque preventing your tool from slipping off a damaged screw head.

Cat. NM-2830 $13.95

New Low Price on Liquid Electrical Tape

NEW PRODUCT

Cat. NM-2832 Black
Was $27.95 Save $8
Now $19.95

Cat. NM-2834 Red
Was $27.95 Save $8
Now $19.95

Also now Available in 1oz Tubes

Cat. NM-2836 Black
$12.95

Cat. NM-2838 Red
$12.95

NEW PRODUCT

OVERNIGHT DELIVERY AVAILABLE*

Can't make it to one of our stores - then let our store come to you!

1800 022 888

www.jaycar.com.au

SURVEILLANCE SALE

These special prices cannot be used in any other package deal!

B&W CMOS with Audio

Was $59.95 Save $10
Now $49.95
Cat. QC-3441

B&W CMOS Pinhole

Was $59.95 Save $10
Now $49.95
Cat. QC-3442

Micro B&W CMOS with Audio

Was $69.95 Save $10
Now $59.95
Cat. QC-3458

Mini B&W CCD

Was $179 Save $20
Now $159
Cat. QC-3473

Micro CMOS Colour

Was $139.95 Save $20
COLOUR
Now $129.95
Cat. QC-3459

Colour CCD with Sony Sensor/Audio

Was $169 Save $20
COLOUR
Now $149
Cat. QC-3476

Colour CCD Dome

Was $239 Save $20
Now $219
Cat. QC-3484

Colour CCD Pinhole

Was $219 Save $20
COLOUR
Now $199
Cat. QC-3486

B&W CCD Waterproof

Was $209 Save $30
Now $179
Cat. QC-3490

Colour CCD Waterproof

Was $369 Save $40
COLOUR
Now $329
Cat. QC-3492

4 Ch. Colour Quad Processor with RS232

COLOUR
Was $549 Save $80
Now $469
Cat. QC-3362

6" 2 Ch. Switching Monitor B&W

Was $129.50 Save $20
Now $109.50
Cat. QM-3401

10" 4 Ch. Switching Monitor B&W

Was $259.50 Save $40
Now $219.50
Cat. QC-3486

960 Hr Time Lapse VCR

Was $899 Save $100
Now $799
Cat. QV-3053

4 Channel DVR

Was $3495 Save $500 COLOUR
Now $2,995
Cat. QV-3052

Surface Mount Resistor Kit
NEW PRODUCT

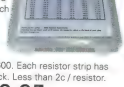

Have that SMD 0805 type resistor handy when you need it. This kit includes 50 pcs each of 72 values, supplied in a handy plastic storage box. Values supplied are 2.4R - 820R 1.0K - 820K, 1.0M - 10M. TOTAL RESISTORS 3,600. Each resistor strip has the value stamped on the back. Less than 2c / resistor.

Cat. KK-2060 $49.95

12" 8 Watt 12VDC Ultra Violet Light

Light up your next party or create a mystic mood with our portable U/V light set. The unit is self contained and consists of a 12" 8W blacklight fluorescent tube mounted in a coloured translucent case. Several lights can be joined to make longer light strips.

NEW PRODUCT

Cat. SL-3157 $29.95

3.5mm 4 Pole Gold Plug
NEW PRODUCT

Used in small audio applications.

Cat. PP-0138 $3.95

Headphone Extension Lead / Adaptor Set

Contains 4 popular headphone/headset adaptors and a 5.5m extension lead.

NEW PRODUCT

Cat. WA-7099 $14.95

Bargain Bags Back Again!
NEW PRODUCT

Contains approx 2kg of assorted electronics goodies - "Junk" if you like. Ideal to fill up your junk box. Unfortunately, due to the massive weight P&P is normally rates plus $6. The picture is the contents of a bag taken off the shelf. We cannot guarantee at all that each bag will contain any of the parts pictured.

Cat. XB-9000 $17.95

USB to 2 x PS2 Lead Adaptor
NEW PRODUCT

Plug your PS/2 compatible mouse and keyboard into one USB port of your PC or Notebook. Approx 300mm long, USB 1.1 compatibility.

Cat. WC-7571 $19.95

USB to PS2 Adaptor

For use with modern PS2 devices which utilise USB logic, i.e. Adaptor contains no circuitry.

USB-A Male to PS/2 Female NEW
Cat. PA-0915 $6.95

USB-A Female to PS/2 Male NEW
Cat. PA-0916 $6.95

IC / Smart Card Acceptor
NEW PRODUCT

For use in designs incorporating the use of Smart Cards/ IC Cards. Features internal SPST switch triggered by card insertion. Data sheets available.

Through Hole Mount
Cat. PS-0012 $8.75

Surface Mount
Cat. PS-0010 $8.75

Vishay 20,000MCD Red LED
NEW PRODUCT

A breakthrough in technology, so new we haven't even seen it, and seems to good to be true! They have a 5mm water clear lens, and Vishay is claiming 20,000MCD, the highest output we have heard of! Drop into your local Jaycar store for a look, or at this price, buy some to find out for yourself!

Due early November.

Cat. ZD-1790 $3.95

Melcom 8 Sector Alarm Panel with LCD Keypad

Melcom Alarms are designed in the UK, and offer excellent value for money. This alarm has an illuminated LCD keypad, which makes set-up, programming and operation easy.

NEW PRODUCT

- Zone naming capability
- Programmable entry/exit time
- Up to 6 programmable user codes
- Personal attack button sequence located on the keypad.
- 'Sleep Watch' mode with remote keypad.

Too many features to list them all! See Cat. Pg. 167 for full details and specifications.

Cat. LA-5320 $299

Extra LCD Keypads Available
Cat. LA-5321 $149.50

Sleep Watch Remote Keypad with Panic Button for Melcom Alarm (LA-5320)
NEW PRODUCT

'Sleep watch' mode enables you to disarm selected internal sectors while maintaining perimeter security and includes a panic button.

Cat. LA-5323 $69.95

OVERNIGHT DELIVERY AVAILABLE*

Can't make it to one of our stores - then let our store come to you!

1800 022 888

www.jaycar.com.au

Non-Contact Digital Thermometer with Laser Sighting

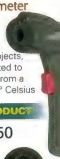

This hand held infrared thermometer quickly takes the surface temperature of any object and, for more remote objects, the built-in laser pointer can be activated to ensure an accurate, on-sight reading from a distance. Temp range is -20° to +270° Celsius (-4° to 518° farenheight).

Was $149.50 Save $20 **NEW PRODUCT**

Birthday Price $129.50

Cat. QM-7220

Digital Sound Level Meter

Features include data hold, high and low range (35 – 100dB and 65-130dB), and a built in calibration circuit. Powered by a single 9V battery (included) and supplied with a foam insert zip-up carry case, complete with shoulder strap. See Cat page 194 for details.

Was $179.50 Save $20

Now $159.50

Cat. QM-1588

Network Cable Tester

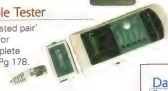

Quickly test 'twisted pair' network cables for correct and complete wiring. See Cat Pg 178.

Was $209
Save $60

Cat. XC-5082 **Only $149**

55Pc Computer Servicing Tool Kit

Housed in a soft leather case, and containing a range of tools, this is the ideal kit for the serious serviceman. See Cat Pg 217 for what's inside.

Was $65
Save $10

Cat. TD-2051 **Now $55**

Floor Standing Laboratory Magnifier Lamp with Castors

Features a 115mm, 3 dioptre magnification lens, and a 22W circular fluoro. A quality cantilever arm with two swivel points allows universal lamp positioning. See Cat Pg 318.

Was $159
Save $20

Cat. QM-3524 **Now $139**

BUY EITHER OF THESE:

goot Anti-Static Temperature Controlled Soldering Station

Cat. TS-1440 **$269.95**

DURATECH Temperature Controlled Soldering Station

Cat. TS-1380 **$179** Cat. TS-1380

Cat. TS-1440

Cat. TS-1865

AND GET THESE FREE:

Anti-Static De-soldering Tool Cat. TH-1865 **$29.95**

Deluxe Solder Tip Cleaner Cat. TS-1510 **$12.95**

That's $42.90 value absolutely FREE!

Cat. TS-1510 shown

BUY THIS:

25 Watt Professional Soldering Iron

Cat. TS-1550 **$34.95**

GET THIS FREE:

Deluxe Solder Tip Cleaner

Cat. TS-1510

That's $12.95 value absolutely FREE!

46W goot 240V Soldering Pencil with Free Anti-Static De-Solder Tool

Cat. TS-1430 **$69.95**

This month only, with every purchase, you will receive a free Anti-Static De-Soldering Tool (TH-1865) worth $29.95!

SAVE THIS MONTH ON THESE MULTIMETERS!

Data Hold DMM

Spectacular features for the price. Diode/Transistor Test, 10A Current, 3.5 digit, Holster included. See Cat P180.

Was $19.95
Save $4

Now $15.95

Cat. QM-1520

Backlit DMM

Data Hold, Continuity Buzzer, Transistor/Diode Test, 10A Current, 3.5Digit, Holster included. See Cat Pg 181.

Was $26.95
Save $7

Now $19.95

Cat. QM-1522

Frequency DMM

SELLOUT! Probe Lockout Shutters, Backlit, Temp, Capacitance, Frequency, Extra Large Display, and Data Hold. See Cat Pg 183.

2001 Was $85
2002 Was $65

Now $49

Cat. QM-1321

Dwell Tacho DMM

RPM x1/x10, Resistance, 15ADC, Dwell Angle, DC Volts, Continuity Buzzer, Holster included. See Cat Pg 189.

Was $78.95
Save $20

Now $58.95

Cat. QM-1440

4 in 1 DMM

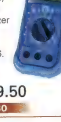

Sound Level (SPL), Light (LUX), Humidity, Temp, Transistor Test, Continuity Buzzer and Rubber Holster. See Cat Pg 186.

Was $99.50
Save $10

Now $89.50

Cat. QM-1580

PROTEK 506 Computer Connect

Dual Display, True RMS, 4000 Count, Bar-graph, Relative Mode, Data Hold, Backlit, 10Mhz Frequency, RS-232 Connect, Diode Test, 20A Current, and much more. See Cat Pg 185.

Was $299 Save $40

Now $259

Cat. QM-1290

Superglow Digital Alarm Clock

Battery operated, with 32mm high digits and at the touch of a button, the display illuminates for a few seconds for night reading. Batteries included.

Reduced to Clear

Cat. XC-0228 **$17.95**

Bench Lamp with Exhaust Fan

Illuminate your workspace, and clear annoying and hazardous fumes such as solder, solvents and cigarette smoke. Mounted on a cantilevered arm, it has universal positioning and a reach of almost 1metre.

Was $159 Save $20

Cat. QM-3540 **Now $139**

Butane Cordless Glue Gun

Powered by standard Butane gas. Features a built-in piezo lighting mechanism and foldout metal stand for safe cooling after use. Features include air vents for improved safety, gas control thumbwheel, safety lock to prevent accidental gas loss and a continuous 2-hour 'burn time'. Supplied in a tough carry case, see Cat. Pg 216 for details.

Was $79.95 Save $10

Cat. TH-1998 **Now $69.95**

OVERNIGHT DELIVERY AVAILABLE*

Can't make it to one of our stores - then let our store come to you!

1800 022 888

www.jaycar.com.au

USB Compact Flash and Smart Card Reader

Plug & Play compatible featuring high speed transfer for Compact Flash and Smartmedia cards
Was $99.95 Save $20

Cat. XC-4770 $79.95

USB to DB25M Converter

Use RS-232C serial devices via the USB port. Transfer speeds up to 115K.
Was $84.95 Save $35

Cat. XC-4836 Now $49.95

Save in November on PIC Microcontrollers

PIC16F84 A-20P Flash memory PIC 18Pin
Cat. ZZ-8500 Cat Price $11.95 Now $9.95 Save $2

PIC16C711 –20P Micro 18Pin
Cat. ZZ-8550 Cat Price $13.50 Now $11 Save $2.50

PIC16C63A-20/SP Micro 28Pin
Cat. ZZ-8560 Cat Price $15.75 Now $12.75 Save $3

PIC12C509 A-04 8 Bit CMOS Micro 8Pin
Cat. ZZ-8600 Cat Price $4.95 Now $3.45 Save $1.50

PIC12C508 A-04 8 Bit Micro 8 Pin
Cat. ZZ-8602 Cat Price $4.95 Now $3.45 Save $1.50

1000mAh AA Ni-MH Batteries

Nipple **Cat. SB-2455** Was $3.35
1+ $2.95 10+ $2.40 20+ $2.10

Solder Tag **Cat. SB-2457** Was $3.59
1+ $3.15 10+ $2.50 20+ $2.20

5 in 1 USB Card Reader/Writer + 2 Port USB Hub

Access data from Compact Flash, Smart Media, IBM Micro drive, Secure Digital (SD) card, and Multi Media Cards (MMC). It also features a 2 port USB hub.
Was $149.95 Save $20
Now $129.95
Cat. XC-4769

USB to USB PC Link Cable

Transfer data between computers via USB ports. Plug n Play support.
See Cat Pg 293.
Was $59.95
Save $20

Now $39.95
Cat. XC-4840

USB Networking Cable

A low cost solution for PC networking via USB networking hubs.
See Cat Pg 293.
Was $69.95 Save $20

Now $49.95
Cat. XC-4845

Waterproof Camping Table Lantern

Featuring a 5Watt Compact Fluoro tube, it produces almost as much light as a 60W incandescent globe. Completely waterproof, it even floats if dropped in water.
See Cat Pg 316
Was $27.95 Save $5
Cat. ST-3035 Now $22.95

Sound Activated Baby Cot Light

Just the thing for anyone with newborns, or a child scared of the dark. It can be sound activated, and will turn on when your child starts crying and stop you fumbling in the dark.
Was $19.95 Save $5
Cat. ST-3029 Now $14.95

12VDC/240VAC 10 x "AA" or "AAA" Ni-Cad & Ni-MH Smart Battery Charger

Microprocessor controlled and will accept up to 10 x AA or AAA cells. Individual status LED's, and discharge function. See Cat P129
Was $69.95
Save $10

Cat. MB-3512 Now $59.95

USB Compact Flash and Smart Card Reader

Supports Compact Flash,Smart Media and IBM Micro drive Cards
Was $89 Save $20

Cat. XC-4812 Now $69

Talking Fridge Magnets

We often come across novelty items in our search for new and interesting products, but seldom have we seen such a large range of unusual talking fridge magnets. See Cat Pg 338 for full range and details.

Briefcase Cat. LM-1700; **Fax Machine** Cat. LM-1712; **Filing Cabinet** Cat. LM-1714; **Public Phone** Cat. LM-1726; **Fridge Message Clip** Cat. LM-1716; **Touch Phone** Cat. LM-1728; **Beer Bottle** Cat. LM-1706; **Notebook Computer** Cat. LM-1718; **Photo Copier** Cat. LM-1708; **Lagerbrau** Cat. LM-1720; **Toilet** Cat. LM-1732; **Diet Scale** Cat. LM-1710; **Memory Phone** Cat. LM-1722; **Truck Memo Clip** Cat. LM-1734 $14.95ea / 2 for $20

Digital Hand Held Compass with Time / Temp / Date / Day / Alarm

Features a large LCD that provides 12/24Hr time, temp, date & day info, and a 3tier compass. See Cat Pg 328 for details.
Was $79.95 Save $10
Cat. QM-7260 Now $69.95

Modified Square Wave Inverters

All Inverters below are; Input: 12VDC, Output: 230VAC and Electrically Isolated for Safety. See Cat Pg 138.

100W (200W Surge)
Cat. MI-5058
Normally $89.50 Save $10
Now $79.50

400W (1200W Surge)
Cat. MI-5064
Normally $199.50 Save $20
Now $179.50

800W (2000W Surge)
Cat. MI-5068
Normally $389 Save $40
Now $349

1500W (3000W Surge)
Cat. MI-5072
Normally $749 Save $70
Now $679

Remote Control A/V Selector Scanner

A versatile 4 way Audio/ Video source switcher that supports both RCA and S-Video plugs. Ideal as a low cost CCD switcher, it also suits home theatre applications. Includes AC Adaptor and Remote.
Was $119 Save $30
Cat. AC-1670 Now $89

$10 Off ABS Rack Mount Enclosures

Made of strong ABS plastic, they are supplied in knock-down form which can be assembled in seconds with no more than a screwdriver. All feature slots for cross flow ventilation, and standoffs to mount PCB's directly onto the covers.

Cat. HB-5135 1 unit (Beige) Was $49.95 Save $10 Now $39.95
Cat. HB-5145 2 unit (Beige) Was $59.95 Save $10 Now $49.95
Cat. HB-5160 3 unit (Beige) Was $69.95 Save $10 Now $59.95
Cat. HB-5140 1 unit (Black) Was $49.95 Save $10 Now $39.95
Cat. HB-5150 2 unit (Black) Was $59.95 Save $10 Now $49.95
Cat. HB-5155 3 unit (Black) Was $69.95 Save $10 Now $59.95

Video Enhancer & Stabiliser

Remove earlier versions of Macrovision copyright protection. Featuring easy operation, cleaning out "extra signals" to produce cleaner video reproduction.
Was $69.95 Save $10

Cat. AR-1820 Birthday $59.95

Mini Pocket Scales

0 – 200Grams – 0.1G Resolution. Compact size and accurate measurement. Now even better value!
Was $149 Save $50

Cat. QM-7246 Birthday $99

OVERNIGHT DELIVERY AVAILABLE*

Can't make it to one of our stores - then let our store come to you!

1800 022 888

www.jaycar.com.au

Venom Subwoofers

Representing great value for money, they feature double magnets, a wide 1" rubber surround, and strong, pressed steel frames.

Get a 12" for the Price of a 10"
Was $99.95 Save $20
Cat. CS-2344 $79.95

Get a 15" for the Price of a 12"
Was $129.95 Save $30
Cat. CS-2345 Now $99.95

2 x 84WRMS Car Amplifier

RESPONSE

Free $10 Gift Voucher

Delivers a solid 84WRMS into 2 channels or 234WRMS into 1 @ 4 Ohms. Includes a built in adjustable high and low pass filter. See Cat Pg 260 for full details.

Cat. AA-0432 $225

2 x 150WRMS Car Amplifier

RESPONSE

Free $15 Gift Voucher

For November only, when you buy one of our award winning 2 x 150WRMS amplifiers, we will give you a $15 gift voucher.

Cat. AA-0434 $335

Spark Plug LED Keyring Torches

Looks just like a real spark plug, but is really a sophisticated LED torch.

White Cat. ST-3068
Blue Cat. ST-3069
Were $14.95ea
Save $9.90
(*Can be different colours)

Cat. ST-3068/9 *Now 2 for $20

2 Gauge Super High Current Power Cable

Current Capacity is 160A
Was $12.95m Save $2m

Cat. WH-3070 Red
Cat. WH-3072 Black

Cat. WH-3070 Now $10.95m
Cat. WH-3072 Now $10.95m

5 Input Stereo DJ/Multimedia Mixer

This quality built mini sized audio mixer is suitable for most DJ applications. Small in size and price, but big on features.
See Cat Pg 241.
Was $119 Save $10

Cat. AM-4200 Now $109

12VDC 130WRMS Car Sub Amp Module

Accepts line level inputs, and delivers 130WRMS into 4Ohms or 165WRMS into 2Ω. Built in variable crossover and 180° phase switch.
Was $179 Save $40

Cat. AA-0514 Nov. $139

12VDC 240WRMS Car Sub Amp Module

240WRMS into 4 Ohms or 290WRMS into 2Ω. High and Line level inputs, variable Xover, three stage bass boost, level and phase controls.
Was $249 Save $50

Nov. $199

Cat. AA-0513

Car Super Tweeters

Add extra treble to your system. They feature an inbuilt crossover capacitor, 40WRMS power handling, and sound great.

Cat. CS-2218
1+ $7.95ea 4+ $6.50ea

Central Door Locking Kit

Supplied with all wiring harnesses and mounting hardware. Do not confuse our high quality locking kits with cheap imitations. Ours are designed to last.

2 Door Kit
Cat. LR-8838 $39.95
4 Door Kit
Cat. LR-8830 $59.95

Large Cabinet Steel Handle

NEW PRODUCT

Use these Heavy Duty Handles to assist in transporting large speaker boxes and PA equipment.

Cat. HS-8009 $8.95

High Quality RESPONSE Car Speakers with Super Tweeters

Start or add to your existing sound system using these coaxial speakers with super tweeters. All have an adjustable 1" titanium tweeter & grills.

6" x 9" 200W max (80WRMS)
Was $95 Save $15
Cat. CS-2290 $80ea

6.5" 160 Watts max (75WRMS)
Was $82.95 Save $12.95
Cat. CS-2288 $70ea

6" 135 Watts max (60WRMS)
Was $76.95 Save $10.95
Cat. CS-2284 $66ea

5" 120 Watts max (50WRMS)
Was $72.95 Save $9.95
Cat. CS-2282 $63ea

4" 100W max (40WRMS)
Was $62.95 Save $7.95
Cat. CS-2280 $55ea

SHADOW Immobiliser / Car Alarm Upgrade

Shadow alarm will provide your car with excellent security & protection. The Alarm is available in 2 parts.

Immobiliser/Controller

Australian/NZ Standards Approved Code hopping remote control. Black wiring harness.

Cat. LA-8970 $129.50

For November only, Buy both together and receive a $15 Gift Voucher to use at any Jaycar Store!

Alarm Upgrade Pack

Backup battery siren.
Shock Sensor.
Bonnet pin switch.

Cat. LA-8975 $79.50

Economy Car Alarm EQUATOR

Features include instant triggering, Immobiliser, Door lock/unlock, Flashing LED, Passive arming, Trigger memory report, and the list goes on.

WHAT YOU GET
•Electronic black box controller
•2 transmitter key-fob learning remote controls
•Shock sensor •Boot pin switch •Mini size siren
•Ignition cut-out relay •Wiring looms
Was $119.50 Save $20

NEW PRODUCT

See cat. page 154 for more!

Cat. LA-8985 Nov. $99.50

Volt, Temp, Clock Display for Cars

This stylish display features a cool EL backlit LCD, battery voltage, in/outside temp, time and date. See cat P328 for details.

Cat. XC-0116 $39.95

New Low Price on Fog Machine

Create dramatic effects for theatrical productions, parties, disco, entertainment venues!
Was $139
Save $50

Cat. AF-1200 New Low Price $89

OVERNIGHT DELIVERY AVAILABLE*

Can't make it to one of our stores then let our store come to you!

1800 022 888

www.jaycar.com.au

ICE Ropelight

Four colours, red, yellow, blue and green set in a frosted plastic 'rope' 17mm dia, and 10m long. The translucent effect is like lights under ice. Comes with a dedicated controller with 8 distinct effects.
Cat. SL-2820
2001 Price $68.95 Save $19

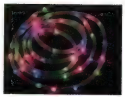

Cat. SL-2820 2002 Price $49.95

3 Way Linkable Lighting

Great for parties and disco effects, this modular lighting system consists of 3 stackable lights and a matching controller that responds to ambient music levels. Individual light modules support coloured R80 60W spot lamps with an Edison screw base. All modules are hexagonal, - 140mm across and are 150 mm deep.
Was $129 Save $15

Cat. SL-2950 Now $114

Replacement Globes $7.80ea
Orange Cat SL-2953
Purple Cat SL-2954
Red Cat SL-2955
Green Cat SL-2956
Blue Cat SL-2957
Yellow Cat SL-2958

Additional Linkable Light Module $22.50ea
Cat. SL-2952

Mirror Balls

Just what you need to add a bit of life to your next party. Use with one or more of our PAR 36 pinspots for an amazing light effect.
See Cat Pg 307 for details.

8" Ball
Cat Price $24.95 Save $4

Cat. SL-2980 Nov. $20.95

12" Ball
Cat Price $43.95 Save $6

Cat. SL-2982 Nov. $37.95

Mains Powered Mirror Ball Motor
Suitable for 8" & 12" mirror balls.

Cat. SL-2984 $24.95

Save this month on these Stepdown Transformers

250W 240 – 115V
Rated at 250W 2.2Amps with Dielectric Electrical Isolation, Size 133(W) x 81(D) x 98(H)mm Weight 3.2Kg.
Was $129 Save $40

Cat. MF-1082 Nov. $89

500W 240 – 115V
Rated at 500W 4.2Amps with Dielectric Electrical Isolation, Size 158(W) x 100(D) x 120(D)mm. Weight 6Kg.
Was $219 Save $70

Cat. MF-1084 Nov. $149

Par 36 Can Light

Includes mounting bracket and 240V-6V transformer. Globe not included. (Use our Cat. SL-2964 $9.95). See Cat P309 for details.
Was $37.95 Save $5

Cat. SL-2960 Now $32.95

"Blacklight" Glow Stick

Great for parties etc, last up to 8hrs.
Were $4.95ea
Now 3 for $10
Save $4.85

Cat. ST-3175

SPST 20A 12VDC MomentaryToggle

Suits our ST-0578 Missile Switch Cover.

Cat. ST-0577 $5.50

New Semiconductors

PIC16F628A-20/P MICRO
Cat. ZZ-8520 $9.95

LM748 GENERAL PURPOSE OP AMP
Cat. ZL-3748 $1.50

TRANSISTOR MOSFET IRF954ON P-CHANNEL
Cat. ZT-2467 $4.95

Colour Wheel for Par 36

This translucent colour wheel attaches to our PAR36 spotlight, and changes colours as the motor rotates the 4 colour segmented wheel. Dia 230mm, motor dia. 75mm, and a 600mm power cable.
Was $31.50 Save $6.50

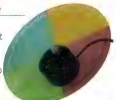

Now $25

Cat. SL-2961

Pedestal Speaker Stands

Tough, steel construction, filled with dry sand and/or lead shot to help reduce resonance from speakers to your floor. See Cat Pg 240 for details. Sold as a Pair.

400mm High
Was $99 Save $15

Cat. CW-2846 Now $84

900mm High
Was $139 Save $20

Cat. CW-2848 Now $119

New Additions to Our High Quality *ConCord* Audio Video Leads

We have now expand our existing range of Concord A/V leads to cater for the longer runs between equipment. All still feature gold plated contacts, shielded plugs, and offer excellent signal reproduction.

RCA Plug - RCA Plug-3m **NEW PRODUCT**
Cat. WQ-7223 $11.95

RCA Plug - RCA Plug-5m
Cat. WQ-7224 $14.95

RCA Plug - RCA Plug-10m
Cat. WQ-7225 $19.95

3 x RCA Plugs - 3 x RCA Plugs - 1.5m
Cat. WQ-7238 $29.95 Component RGB

3 x RCA Plugs - 3 x RCA Plugs - 3m
Cat. WQ-7240 $34.95 Component RGB

3 x RCA Plugs - 3 x RCA Plugs - 5m
Cat. WQ-7237 $39.95

3 x RCA Plugs - 3 x RCA Plugs - 10m
Cat. WQ-7235 $49.95

NEW JAYCAR WEBSITE

Have we got your attention? It's online NOW.

Our new "State-of-the-Art" Jaycar website. With increased focus on easy ordering and product information.

NEW IMPROVED FEATURES:

- √ Express Ordering
- √ Faster
- √ Advanced Searching
- √ Trade Pricing
- √ New Zealand Pricing
- √ Easier Navigation
- √ Software Downloads
- √ Media Releases
- √ Over 3,247 pages of semi-conductor data with search

OVERNIGHT DELIVERY AVAILABLE*

Can't make it to one of our stores - then let our store come to you!

1800 022 888

www.jaycar.com.au

DISCONTINUED KIT BOARD SELLOUT

We still have a quantity of PCB's from old kits.
Prices have been slashed even further! Prices in A$ only.

Jaycar ELECTRONICS No 1 For Kits

Only available from Aust. Techstore Mail Orders. Not available from Jaycar stores.

CAT NO	QTY	BOARD NO	DESCRIPTION	ISSUE	PRICE
EC7124	100	EA96SBA3	SUBWOOFER BRIDGE ADAPTER	Mar-96	$3.50
EC7127	80	EA 96LFT	LINE FILTER CONDITIONER	Jul-96	$2.60
EC7138	90	97CEMG	CRITICAL SYSTEM ALARM	Mar-97	$2.30
EC7513	200	AEM1502	FM MINDER BUG	Mar-88	$2.00
EC7637	5	SC10109922	KNIGHTRIDER LED DISPLAY	Nov-88	$3.60
EC7671	3	SC08106961	HORACE THE CRICKET	Aug-90	$2.80
EC7673	4	SC04309901	LOW COST 3 DIGIT COUNTER	Jun-90	$3.80
EC7720	15	SC01301952	5A DRILL SPEED CONTROLLER	Sep-92	$2.25
EC7782	25	SC01301952	DIGITAL EFFECTS BOARD/SW BRD	Feb-95	$0.50
EC7784	2	SC08310951	VADER VOICE MKII	Sep-95	$3.10
EC7836	5	SC02303971	NTSC TO PAL CONVERTER	May-97	$4.15
EC7838	10	SC02305972	COLOUR PATTERN GENERATOR	Nov-91	$10.00
EC7851	4	SC05311971	SPEED ALARM FOR CARS	Dec-89	$7.00
EC7863	36	SC04104981	3 LED LOGIC PROBE	May-98	$1.00
EC7879	100	SC10106981	STEP MOTOR CONTROLLER	Jun-98	$4.00
EC7880	8	SC05308981	GEAR SHIFT INDICATOR	Sep-98	$5.00
EC7882	29	SC01307981	WAA WAA EFFECTS PEDAL	Sep-98	$3.50
EC7888	70	SC04112981	THERMOCOUPLE ADAPTER	Dec-98	$2.00
EC7897	60	SC01303991	AUDIO COMPRESSOR KIT	Feb-99	$3.00
EC7914	36	SC05408991	TURN YOUR CAR INTO A VOLVO	Aug-99	$3.50
EC7925	50	SC04101001	A/V TEST GENERATOR	01/00	$4.70
EC7933	90	SC04102001	SINE SQUARE WAVE GENERATOR	02/00	$3.50
EC7945	45	SC01108001	SPEAKER PROTECTOR KIT	08/00	$4.70

AVR ISP Serial Programmer Kit

NEW PRODUCT

Ref: SC Oct 2002

Program, erase and rewrite the program and data memory in your AVR micro-processor without removing it from the circuit. Connects to the computer serial port, uses royalty-free software available on the Internet and allows you to program micros in the AVR 8-bit RISC family (see Jaycar website for full listing). Kit supplied with PCB, Jiffy box with silk-screened lid and all electronic components.

Cat. KC-5340 $45

OUR LATEST KITS

12V Inverter Kit for 40W/240V Fluoro's	SC Sept 02	Cat KC-5338	$74.95
Driving Light Protector Kit	SC Sept 02	Cat KC-5337	$24.95
Headphone Amplifier Kit	SC May 02	Cat KC-5335	$19.95
Multi Mode Timer Kit		Cat KD-6017	$42.95
12V Battery Guardian Kit	SC May 02	Cat KC-5334	$39.95
Itsy Bitsy USB Light Kit	SC Mar 02	Cat KC-5328	$12.95
Touch/Remote Controlled Light Dimmer Kit		Cat KC-5324	$69.95
10 Channel IR Remote Control Receiver Kit		Cat KC-5326	$49.95
Raucous Alarm	SC Jan 02	Cat KC-5327	$34.95

Cat KC-5335

Cat KC-5334

Cat KC-5324

Cat KC-5327

Cat KD-6017

Cat KC-5328

Cat KC-5326

5-Amp Mains Speed Controller Kit for Motors

NEW PRODUCT

Ref: SC Oct 2002

Designed for universal 'brush type' 240V motors, controls the speed of appliances rated up to 5 amps, such as circular saws, routers etc. Kit supplied with PCB, Diecast box, silk-screened lid, panel hardware and all electronic components. Some drilling required. Not to be used with induction or shaded-pole motors.

Cat. KC-5339 $55

LOOKING FOR AN OLD KIT?

If you are, we may have it in our Kit Back Catalogue. The 'Kit Back Catalogue' range is listed on the Jaycar website (under Kits & Projects) and can only be purchased via the website "www.jaycar.com.au" or Techstore (i.e. not the Jaycar stores)

STORE LOCATIONS / CONTACT NUMBERS:

All prices valid to end November 2002

Jaycar ELECTRONICS

MAIL ORDERS - FREE POST TO:
Reply Paid 72, Jaycar Techstore Mail Orders, PO Box 6424 Silverwater NSW 1811
Free Call For Orders: 1800 022 888 Enquiries: (02) 9741 8538 Fax: (02) 9741 8559

EMAIL ORDERS: techstore@jaycar.com.au

Post $10 to $24.99:	$4.40
Post $25 to $49.99:	$5.50
Post $50 to $99.99:	$7.70
Post Over $100:	$8.80

Road Freight Anywhere In Australia (up to 20kg): $15.50
Express Post Max 500g: $7.70
Express Post Max 3kg: $11.00

*Overnight Delivery Available Subject to conditions:
•Max weight 3KG (inc cubic) $11 •No dangerous goods
•Max weight 5kg (inc cubic) $16.60 •Stock & availability
•Orders must be received before Midday E.S.T.

Most Major Credit Cards Accepted

bankcard VISA Diners Club International MasterCard eftpos

NSW - BANKSTOWN
•363 Hume Hwy. •Ph: (02) 9709 2822
BONDI JUNCTION
•112 Spring St •Ph: (02) 9369 3899
CAMPBELLTOWN
•Shop 2/49 Queen St. •Ph: (02) 4620 7155
ERINA
•Unit 1/217 The Entrance Rd •Ph: (02) 4365 3433
NEWCASTLE
•990 Hunter Street •Ph: (02) 4965 3799
PARRAMATTA
•355 Church St. •Ph: (02) 9683 3377
PENRITH
•199 High St •Ph: (02) 4721 8337

SILVERWATER
•100 Silverwater Rd •Ph:(02)9741 8557
ST. LEONARDS - GORE HILL
•168 Pacific Hwy •Ph: (02) 9439 4799
SYDNEY CITY
•129 York St •Ph: (02) 9267 1614
WOLLONGONG
•354 Keira Street •Ph: (02) 4226 7089
ACT - CANBERRA
•121 Wollongong Street, Fyshwick
•Ph: (02) 6239 1801
TAS - HOBART
•140 Campbell St. Hobart
•Ph: (03) 6231 5877

SA - ADELAIDE
•191-195 Wright Street •Ph: (08) 8231 7355
VIC - COBURG
•265 Sydney Rd •Ph: (03) 9384 1811
FRANKSTON
•5/6, 424-426 Nepean Hwy. •Ph: (03) 9781 4100
GEELONG
•180 Moorabool St. •Ph: (03) 5221 5800
MELBOURNE
•Shop 2,45 ATBeckett St •Ph: (03) 9663 2030
RINGWOOD
•141A Maroondah Hwy •Ph: (03) 9870 9053
SPRINGVALE
•887-889 Springvale Rd Mulgrave. •Ph: (03) 9547 1022

WA - PERTH
•326 Newcastle St Northbridge •Ph: (08) 9328 8252
QLD - ASPLEY
•1322 Gympie Rd. •Ph: (07) 3863 0099
BRISBANE - Woolloongabba
•65 Ipswich Rd •Ph:(07) 3393 0777
GOLD COAST - Mermaid Beach
•2/74 Gold Coast Hwy. •Ph: (07) 5526 6722
TOWNSVILLE
•177 Ingham Rd. West End. •Ph: (07) 4772 5022
NZ - NEW ZEALAND - Newmarket - Auckland
•231 Khyber Pass Rd. •Ph: (09) 377 6421
NEW ZEALAND - Glenfield - Auckland
•135 Wairau Road. •Ph: (09) 444 4628

HEAD OFFICE: 100 Silverwater Rd. Silverwater. NSW 1811
Phone: (02) 9741 8555 Fax: (02) 9741 8500

FREECALL FOR ORDERS
1800 022 888

Can't make it to one of our stores - then let our store come to you!
www.jaycar.com.au

PRODUCT SHOWCASE

Another Av-Comm enthusiast satellite receiver bargain!

SILICON CHIP readers will recall the last time Av-Comm's Garry Cratt got his hands on a disposals shipment of analog satellite receivers and dishes (July 2000) – and sold them out in just a few days (much to many people's angst!).

Well, he's done it again. This time, there are no dishes – it's strictly receivers only – but the receivers are in either brand new or as-new condition.

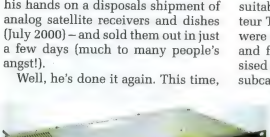

He has several hundred, 19-inch rack mount analog satellite receivers, suitable for analog satellite and amateur TV applications. These receivers were made in Japan by DX Antenna and feature pushbutton PLL synthesised tuning, with transponder /audio subcarrier frequency display.

They have a signal strength meter, video and audio line level adjustments, IF bandwidth and frequency programming controls (including lock) accessible from the front panel.

Frequency increments are in 100, 10 and 1 MHz steps, in the range 950-1450MHz.

The rear panel has composite video, baseband and balanced audio outputs, as well as LNB power ON/OFF, and video de-emphasis switching. There is also a baseband drive level control, and a switchable 10dB input attenuator.

If required, Av-Comm can also supply the user manual and circuit diagrams for these receivers. And needless to say, if you do need a dish and mounting hardware, Av-Comm can help you out there – at the right price.

Once again it's ***strictly*** while stocks last (remember the rush last time!). These receivers are available for $55ea, including GST. Freight is extra and depends on the number ordered, the freight method and the destination.

Contact:
Av-Comm
PO Box 225, Brookvale NSW 2100
Ph: (02) 9939 4377 Fax: (02) 9939 4376
Website: www.avcomm.com.au

National Instruments moves Aust. HQ to Sydney

National Instruments plans to relocate their Australian headquarters from its present location in Melbourne to new offices in Sydney. The move, scheduled for completion by February 2003, helps NI Australia meet the needs of its growing customer base in the New South Wales region.

The move to Sydney reflects National Instruments continued growth and long-term investment in their operations in Australia, New Zealand, and around the world.

NI Australia will continue to operate a sales office in Melbourne but the new Sydney headquarters will include a convenient technical support and repair center and the largest NI training center in Australia.

In addition to the move, the Australian office has appointed a new branch manager, Jeremy Carter, an eight-year veteran of NI Australia.

Contact:
National Instruments Australia
PO Box 466, Ringwood Vic 3143
Ph (03) 9879 5166 Fax (03) 9879 6277
Website: www.ni.com/australia

World's first silicon-based RF capacitors

Vishay Intertechnology, Inc has released the first silicon-based RF capacitors, a technology breakthrough that boosts electrical performance while greatly reducing the board space required for circuitry in cell phones and other wireless communication systems.

The new HPC0402A capacitors provide the same broad range of capacitance values as conventional capacitors (0.6pF up to 180pF with tolerance to ±1% or 0.05pF) while delivering superior stability over a wide frequency range, high Q factors, low ESR values and highly accurate dimensions. They are available in 6-V, 10-V, 16-V, and 25-V options.

Typical applications for the new devices will include wireless communications, GPS, VCO, filter and matching networking, and power amplifiers.

Contact:
Vishay Intertechnology Inc.
Malvern, Pennsylvania, USA
Ph: 0011 1 610 251-5287
Website: www.vishay.com

TFT LCD industrial monitors

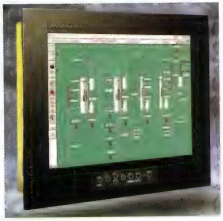

Intelligent Systems Australia has announced the release of the Vector range of industrial TFT LCD monitors in Australia.

They are available in 15" and 18" models, with or without touchscreens. Enclosure styles include Panelmount IP65, Panelmount IP65 Stainless, Panelmount IP54, Rackmount and Wallmount. Touchscreen options include capacitive, resistive and SAW in both RS-232 and USB interfaces.

The Vector range is manufactured by Aydin Displays in the United States. For more the 25 years, Aydin Displays have been the leading supplier of Industrial and Military Touchscreen Displays in the US. Their web site is at www.aydin-industrial.com.

Contact:
Intelligent Systems Australia
PO Box 27, Cockatoo Vic 3781
Ph: (03) 5968 0117 Fax: (03) 5868 0119
web: www.inteligentsystems.com.au

LCD projector remote controller

JED Microprocessors have released a dedicated, microprocessor-powered controller for LCD Data and Video Projectors. The fully programmable controller can handle more than 75 of the most popular projectors on the market, including Hitachi, NEC, Mitsubishi, Epson, Sanyo, Proxima and ASK – and can also be programmed to handle less popular models.

It is housed on a plastic plate the size of a standard power outlet and in fact uses a power outlet mounting box for fixing in permanent or semi-permanent positions. It operates from 9-15V DC.

The T460 communicates with the projector via a 3-wire RS232 link (a future model is planned to have infrared control). It is designed to be mounted in a convenient position (eg, on the speaker's lectern) to give complete "remote control" to the projector. The simplicity of operation of the T460 means that presenters who are unfamiliar with A/V equipment do not need an audio/visual assistant/operator to run a "show".

Four push-buttons handle all the controller's functions with an LCD screen to tell you what's happening. At the heart of the controller is the Wilke Tiger CPU, running multitasking compiled BASIC in a 20MHz CPU, with 512Kbyte of FLASH memory. It can easily be reprogrammed in-situ via a serial cable. Future software upgrades (from the JED website) are planned to handle even more projectors.

Up to eight sources of signal can be selected, simply by stepping through a menu displayed on the LCD screen. Audio can also be controlled with audio control signals sent to the projector along with the video source and power control signals. If a companion T461 audio attenuator/mixer is installed, audio levels can be controlled and selected in step with source select signals sent to the video projector. Relay outputs in this box can also be used for such things as motorised screens, curtains, light dimmers and so on.

Contact:
JED Microprocessors
PO Box 30, Boronia Vic 3155
Ph: (03) 9762 3588 Fax: (03) 9762 5499
Website: www.jedmicro.com.au

Personal alcohol breathalyser

Drinking and driving continues to be a major social problem within Australia. One of the key reasons is that people find it virtually impossible to identify if they are over the limit or not. In many instances, it can only take a few drinks to put someone over the limit and often without them realising it.

But now there is a product that takes the guesswork out of this process. It is called the Sober Check SC3000 Personal Alcohol Breathalyser and it accurately measures the user's blood alcohol concentration (BAC), allowing them to make an informed decision about driving or not.

There are many factors that determine a person's blood alcohol level, but the SC3000 is claimed to be the only personal device that can accurately measure it. The Sober Check SC3000 has been specifically calibrated to the Australian legal limit.

At a lightweight 200 grams, it is pocket-sized and easy to have on you when you need it. Its accuracy level, using the latest oxide sensor technology, is the highest available for a consumer breathalyser (.01% at the .10% BAC level). It is also reusable time and time again – friends, family and colleagues can use it by simply changing the mouthpiece.

Recommended retail price is $279.95

Contact:
Sober Check International
Suite 126, 184 Blues Pt Rd
McMahons Point NSW 2060
Ph: 1800 151 208
Website: www.sobercheck.com.au

"evolution" speakers: with extruded tubular enclosures

Sydney-based Austube Tubular Speaker Systems have released their range of "evolution" speakers featuring extruded aluminium enclosures.

The extrusion is one piece, with internal fins and an acoustically optimised shape said to give minimum internal reflections and colourations.

Included in the range are the EVO3TW main tower speakers which stand some 1.5 metres tall yet occupy a footprint of just 320 x 320mm. These speakers have four high-complinace 3-inch mid-range/woofers with polypropylene/mica cones, cast magnesium baskets and fully magnetically shielded neodymium magnet assemblies.

They are rated at 80W RMS with a frequency response of 65 -20,000Hz.

The EVO3SUB2 and EVO3SUB2P subwoofers are an integral part of the setup. The difference between the two is that the "SUB2" is self-powered (with a 100W amplifier) while the SUB2P is not.

With a double-braced MDF bass reflex enclusore, the SUB2 has a frequency response of 35-200Hz (adustable on the rear panel). The size is 310 x 410 x 315mm.

Also shown in the system pictured above are the EVO3AVR rear-channel speakers. Again, these are based on the one-piece aluminium extrusion and contain one 3-inch midrange/woofer in a 300mm high enclosure. A larger rear-channel box, the EVO3AVR2 (not pictured), contains four similar speakers in its 600mm height.

Rounding out the system is the EVO3AVC centre-channel speaker. Again, this is based on the aluminium extrusion and is 600mm wide, 100mm deep and 100mm high.

Standard body colours are red, blue, pearl white, anodised and black, while the grille colours are white, silver and black. Other colours for both body and grille are available on request.

Contact:
Austube Tubular Speaker Systems
Ph: (02) 9766 5588 Fax: (02) 9767 5577
Web: www.austube.com.au/evolution

Oatley's ultrabrite ultrabrite LEDs

We used to think that 1000mCd was pretty neat. And expensive. Now Oatley Electronics have a range of LEDs which are very, very bright – and much cheaper!

All are 8-10Cd (yes, 8000-10,000mCd!) and the most you'll pay is $2.50 each for white ones. If you want garden-variety yellow or red, they're only 70c and 80c each respectively!

Green ones sell for $2.10 each, Blue for $2.20 each and UV are $1.60.

For more info, see Oatley's website.

Contact:
Oatley Electronics
PO Box 89, Oatley NSW 2223
Ph: (02) 9485 3563 Fax: (02) 9584 3564
Website: www.oatleyelectronics.com

AUDIO MODULES
broadcast quality

Manufactured in Australia
Harbuch Electronics Pty Ltd
9/40 Leighton Pl. HORNSBY 2077
Ph (02) 9476-5854 Fx (02) 9476-3231

"Tradestart" sparks electrical exporters

Australian electrical, electronic and information communications technology industries now have access to a new national TradeStart office to assist them break into overseas markets.

Trade Minister Mark Vaile said that Austrade had signed a partnership agreement with Australian Electrical and Electronic Manufacturers' Association (AEEMA) to establish the new TradeStart office to help drive the Government's commitment to double the number of Australian exporters in five years.

The Australian electrical and electronic industry is a major generator of jobs and export revenue for Australia. Export revenue exceeded $4.9 billion in 2000-01, some 3% of Australia's total exports.

Companies can contact the TradeStart office (operating out of Brisbane but with a national focus) by telephoning (07) 3831 0993. **SC**

MEASURE RF VOLTAGES IN CIRCUIT
- 100kHz – 750MHz @ 10mV sens. (usable to 1.5GHz)
- Up to 70V RMS (100Vpk)
- Use with any standard DMM
- High tensile tip

RF Probes Pty Ltd
PO Box 6, Greensborough 3088
Phone:(03) 94321936 Fax:(03) 9444 7750
Email: admin@rfprobes.com.au
www.rfprobes.com.au

SuperCharger

Build this advanced small-cell charger and step up to the newest generation of super-capacity rechargeable batteries

Fast charging small batteries demands more smarts than you'll find in typical 'off-the-shelf' chargers. We've packed what you need into a small, portable unit that makes rechargeable batteries almost as convenient to use as alkaline batteries.

Pt.1: By PETER SMITH

Recently, capacity ratings for 'AA' size Nickel-Metal Hydride (NiMH) batteries topped 1800mAh. Similarly, 'AA' Nickel-Cadmium (NiCd) batteries with ratings of 1000mAh or more have become commonplace. These new super-capacity rechargeables are ideal for use in a whole range of high-drain devices, including camcorders, digital cameras and portable music players. In fact, they can last 2-3 times longer on a single charge than alkaline batteries in some applications.

However, their attractiveness begins to fade somewhat if you find you have to wait for half a day or more every time you want a recharge.

Despite what the marketing hype might say, most off-the-shelf 'fast' chargers can't fast charge these new small, high-capacity cells. In fact, the majority of so-called 'fast' chargers require at least three hours to recharge even the lower-capacity varieties.

By contrast, the SILICON CHIP SuperCharger allows you to safely fast-charge small, high-capacity cells as well as all the usual lower-capacity varieties. You don't have to wait around for half a day with this charger.

Battery capacities & 'C' rate

The capacity of small batteries is generally marked in milliamp-hours (mAh). This figure is usually arrived at by first charging for 16 hours at the 0.1C rate, followed by discharging at the 0.2C rate. The results are then "normalised" to mAh for comparative purposes.

The 'C' value we're referring to is simply a representation of some fraction of the (normalised) battery capacity. It's a convenient way of expressing a particular charge or discharge rate, based on the stated mAh rating.

For example, the 1C charge current for a 1600mAh battery is 1600mA. This is the current that's required to charge the battery to 100% capacity over a one-hour period – at least, in

theory. Charging the same battery at a 0.5C rate, or 800mA, for two hours would also return the battery to full capacity.

In reality, slightly more than the rated capacity must be applied to return full charge, due to losses in heat and the electrochemical exchange process.

Note, however, that the mAh rating stamped on a battery does not imply any particular maximum charge or discharge rate. This information must be obtained from the manufacturer's technical data sheets.

Fast charging

The most common rate used for charging NiCd and NiMH batteries is probably still the 'standard' 0.1C rate. This is the rate supported by most 'supermarket' cabinet-style chargers. Why? Simply because it is cheap and foolproof. No complex or high-power electronics are needed and if you forget to switch off the charger after 14-16 hours, nothing bad happens!

In fact, 0.1C is still the recommended charge rate for mid-range cylindrical ('C' size and larger) NiMH batteries.

The good news is that many smaller batteries, in particular the AA, AAA and ½AA sizes, *do* support fast charging. Typically, NiMH-chemistry types can be charged at up to their 1C rating, while high-capacity NiCds (eg, Sanyo's Cadnica Ultra series) will accept a 1.5C charge rate.

As a bonus, NiCd and NiMH-chemistry batteries can actually benefit from a fast charge regimen. Fast charging minimises an effect called "voltage depression", a problem that can significantly reduce the output of a cell over time.

By the way, 'fast' charging – as opposed to 'standard' (0.1C) and 'quick' (0.33C) charging – refers to any rate above 0.5C.

The main aim of this new charger design is to allow you to charge all the popular format small cells in the shortest possible time – without exceeding their maximum allowable 'C' rate. This means that, in most cases, you can have your batteries back in action in about an hour!

Fill 'er up!

Supplying the correct charging current is only part of what is required for successful fast charging.

MAIN FEATURES

- Designed for charging high-capacity AA, AAA & ½AA NiCd & NiMH batteries
- Charges NiCd & NiMH batteries from 200mAh to 1800mAh, selectable in 200mAh steps
- Charges from 1 to 6 cells
- Supports rapid (1.5C & 1C), fast (0.5C) and standard (0.1C) charge rates
- Returns more than 90% battery capacity in the first hour
- Includes 2-hour top-up charge to return near 100% rated capacity
- Automatically switches to trickle charge at end of rapid/fast charge
- Includes intelligent charge termination to limit unnecessary overcharging
- Discharge before charge mode reconditions both chemistry types
- Can recover totally flat cells
- Small, portable design operates from a plugpack or cigarette lighter socket
- Optional high-current battery holder or utilises off-the-shelf holders

Once a charge cycle has begun, battery condition must be closely monitored and the charge current cut off at just the right point. As a cell approaches 100% charge, its internal temperature and pressure rises rapidly. If left unchecked, venting of the gaseous electrolyte occurs, resulting in permanent cell degradation. Repeated overcharging greatly reduces cell life at best and at worst, can result in cell destruction (or even explosion).

A number of different methods can be applied to detect the fully charged state. One of the simplest involves detection of the small drop in voltage that occurs as a cell moves from the charged to overcharged state. For NiCd batteries, this is about -20mV per cell, while for NiMH batteries, it is about -5mV to -10mV per cell. This method of charge termination is called 'Negative Delta Voltage' (-ΔV).

Another popular method involves detecting the sharp rise in cell temperature mentioned earlier. Typically, battery temperature is sensed by a thermistor placed in direct contact with one of the cells. When the temperature rises at a rate of about 1°C per

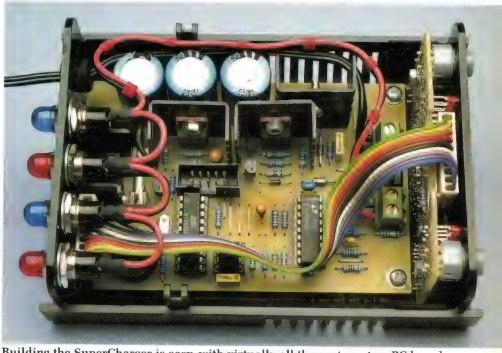

Building the SuperCharger is easy, with virtually all the parts on two PC boards: a main board and a front panel board.

These high-capacity NiMH AA-cells are typical of the new-generation rechargeable batteries that are now available.

minute, the charge is terminated. This is called Delta Temperature/Delta Time ($\Delta T/\Delta t$) termination and it results in slightly less overcharge than the -ΔV method.

The SuperCharger uses -ΔV as its primary termination method. This is easier to implement in a "loose" cell charger, where repeated attachment and removal of a temperature-sensing device is awkward. To minimise overcharge, the SuperCharger terminates both NiCd and NiMH fast charges with a -ΔV of only 6mV.

Should the primary method fail for any reason, a timer terminates the charge at 120% of rated capacity. This minimises any risk of cell damage due to overcharge.

Memory effect

Most of our readers will have heard of the infamous NiCd battery 'memory effect', so we're not going to ramble on about it again here. Suffice to say, this problem has been eliminated by changes made to cell materials and construction.

However, both NiMH and NiCd batteries can suffer from a related problem called 'voltage depression'. This is caused by repeated shallow charging and discharging at low 'C' rates. When this occurs, batteries can exhibit an apparent loss of capacity and low charge acceptance.

Batteries left idle for long periods can also exhibit this problem. A number of NiMH batteries we purchased recently were perfect examples. Although essentially 'flat', they would accept at most only about 0.2C charge (when fast charged) before entering the overcharged state.

Restoring full capacity

Luckily, this condition is easily reversible by first charging to full capacity at the 0.1C rate and then cycling several times at the fast charge rate.

By cycling, we mean discharging down to no less than 0.9V per cell, followed by a charge to 100% capacity.

Why 0.9V per cell? Well, despite what you might have read, rechargeable batteries should never be totally discharged. In a typical battery stack, one or more cells will be slightly 'weaker' than their neighbours and will reach total discharge (0V) first. They will then be charged in reverse, causing similar life-reducing effects to those found in overcharging.

It goes without saying that we've incorporated a safe 'discharge-before-charge' function into the SuperCharger, as well as provision for charging at the standard (0.1C) rate to cater for the above scenarios.

How it works

The circuit diagram for the SuperCharger is divided into two sections, corresponding to two separate PC boards.

Most of the electronics resides on the 'main' PC board and its circuit is shown in Fig.1. The display electronics, including all the LEDs and switches, reside on the 'front panel' PC board, as shown in Fig.2.

Basically, the circuits in Figs.1 & 2 can be divided into four main sections: microcontroller & front panel circuitry; battery management; constant current source; and power supply. Let's look at each of these in turn.

Power supply

Power for the circuit can be supplied via either a 16VAC 1.5A plugpack or a 13.8V DC car lighter socket. You'll note that we've provided a separate input socket for each source. This minimises the voltage drop on the DC input (CON2) side. The current path for the DC input is via just one diode of the bridge (DB1), rather than two as would be the case if both sources connected via CON1.

For operation in an automotive environment, TVS1 limits peak voltage transients to no more than 40V, while capacitors C1-C4 provide the necessary filtering when an AC supply is used.

The resultant unregulated rail voltage ($+V_{IN}$) when the circuit is idle (not charging) is about 21.5V with an AC input and just under 12V with a DC input. This unregulated voltage is used to charge the battery stack as well as supply two DC regulator circuits.

The first of these is a 3-terminal regulator, in the form of an LM317 (REG2). It provides +5V for the microcontroller (IC2), op amp (IC4) and associated circuitry.

Transistor Q1, diode D1 and zener diode ZD1 form a second series-pass regulator. This circuit provides power to the LTC1325 battery management IC (IC3). Its sole purpose is to ensure that the V_{DD} supply to the chip never exceeds +16V.

Microcontroller & front panel

All elements of circuit operation are controlled by an Atmel AT90S2313 microcontroller (IC2). Its many tasks include detecting and responding to user switch presses, turning LEDs on and off and sounding the piezo buzzer. It is also responsible for charge control and monitoring the battery state (via IC3), which we'll look at in detail shortly.

Eight microcontroller port lines (PD0–PD6 & PB0) are routed to the front-panel circuitry via CON4. Referring now to Fig.2, the eight signals arrive on CON7, where they are used to control 14 LEDs and read four switches.

The LEDs and switches are accessed in a matrix (row/column) format. Looking at the LEDs first, we can see that port bits PD4–PD6 & PB0 control the four columns. They drive transistors Q5-Q8, which in turn provide power to each of the four strings of LEDs.

The rows are formed by port bits PD0-PD3 which, when driven low (0V), can switch on any LED in an active column.

The columns are driven sequentially, with each being active for only 5ms. Therefore, it takes 20ms to refresh the entire LED array. Although any LED is switched on for only 25% of the total time, it appears to the naked eye to be always on.

The pushbutton switches are ar-

Fig.1 (right): the circuit diagram for the main PC board. An AT90S2313 microcontroller handles all aspects of the charge cycle, with help from an LTC1325 Battery Management IC.

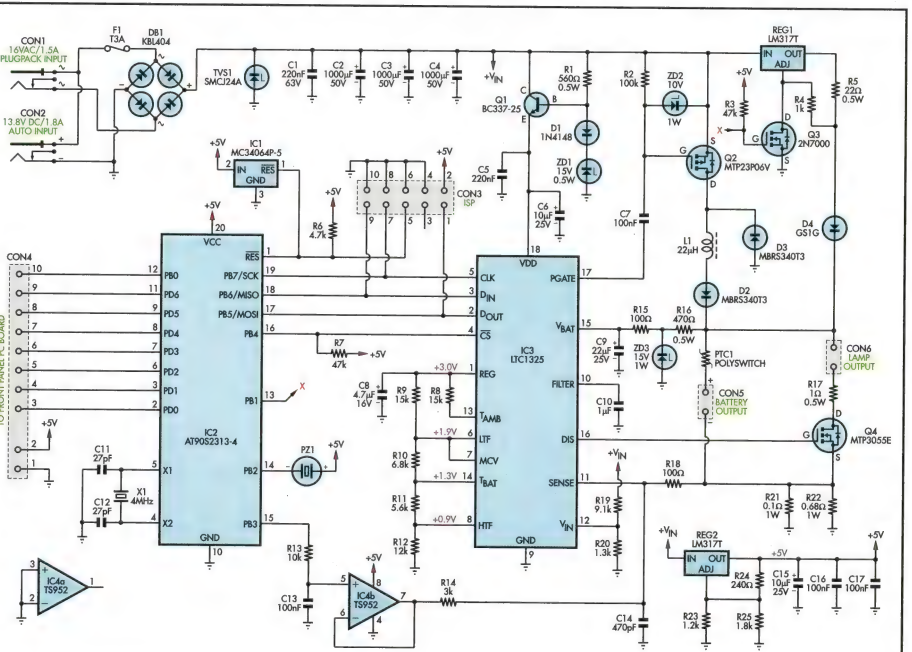

SC 2002 **SUPERCHARGER**

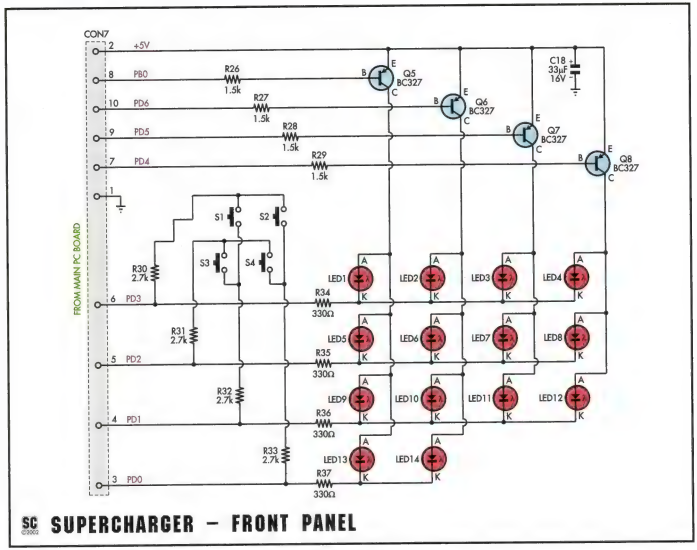

Fig.2: all LEDs and switches reside on the front panel PC board, as shown here. Resistors R30-R32 isolate the switches from the LED row drivers, so pressing a switch does not interfere with the LED display.

ranged in a similar row-column format. Port bits PD2 and PD3 form the columns, while PD0 and PD1 form the rows.

To begin a switch read cycle, the micro activates a column by writing a logic low (0V) to the associated port bit, leaving the alternate column bit high (+5V). Resistors internal to the micro pull up PD0 and PD1 to +5V. Now when the micro reads the two row bits, both will be high (+5V) – unless a switch is pressed. Pressing a switch in the active column pulls the connected row down to 0V, allowing the micro to determine which switch is depressed. The micro cycles between the two switch columns every 5ms, allowing it to quickly detect user input.

All of these operations are made possible by the program running in the AT90S2313 microcontroller. The program code for the AT90S2313 is contained in 2KB of on-chip 'Flash' memory. This can be programmed in-circuit via CON3, the ISP (In-System Programming) header. We'll refer to ISP programming in more detail in the construction section.

Battery management

Battery charging, discharging and front-line monitoring are carried out by IC3, an LTC1325 battery management IC from Linear Technology. This device features a programmable 111kHz PWM (pulse width modulated) constant current source, a 10-bit A-D converter, two voltage regulators, a discharge-before-charge controller, a programmable battery voltage attenuator and a serial interface.

Unfortunately, a detailed description of the internal workings of the LTC1325 is beyond the scope of this article (detailed information is available from the data sheets, which can be downloaded free from **www.linear-tech.com**). Instead, let's touch briefly on some of the more important features of this IC as they relate to our project.

(1) PWM current regulator: charge current is delivered to the battery via Q2, L1, D3, R21 & R22, which together with IC3 form a PWM current regulator. The PWM signal from pin 17 of IC3 drives the gate of a P-channel MOSFET (Q2). When switched on, Q2 charges inductor L1 from the DC rail. When it switches off, L1 delivers its energy to the battery via D3 and R21/R22.

The voltage dropped across R21/R22 is fed back to the PWM control circuitry via pin 11. When it reaches 160mV, the loop is in regulation. Internal control circuits integrate the

feedback voltage such that it is directly equivalent to the average charge current through the battery. Therefore, a simple Ohm's law calculation reveals the average regulated current as follows:

Average battery current = 160mV/(0.1R || 0.68R) = 1.835A

This is the maximum supported charge current. However, the Super-Charger boasts programmable charge currents from 200mA right up to 1.8A in 200mA steps. This is achieved by modifying the feedback voltage with a second programmable voltage from a D-A converter.

The D-A converter consists of a microcontroller-generated PWM signal, an integrator and a buffer. The PWM signal appears on pin 15 of IC2 and is integrated by R13 & C12 to provide a DC voltage level. It is then applied to the input of op amp IC4, which acts as a non-inverting unity-gain buffer.

Varying the duty cycle of the PWM signal varies the DC voltage level. As the PWM is programmed for 8-bit mode, a 1% change in duty cycle gives about a 19.5mV change in the DC level.

The voltages from the op amp output and the current sense resistors (R21/R22) are summed at pin 11 of IC3 via scaling resistors R14 and R18. Therefore, by varying the D-A converter's output voltage, the microcontroller can 'fool' IC3 into reducing the current in the charging loop to the desired level.

So far, we've neglected to mention PTC1 and D2, which are also situated in the charging circuit. PTC1 is a 2.5A 'Polyswitch', otherwise known as a resettable fuse. In normal operation, its low resistance has little effect on circuit operation. However, at current levels above 2.5A, such as might occur if a battery pack is connected in reverse, its resistance increases rapidly. This reduces circuit current to safe levels and prevents smoke & fire!

D2 is included to prevent the battery from discharging back through the DC rail via the body drain diode of the MOSFET (Q2) when input power is disconnected.

(2) Discharge-before-charge: battery discharge is performed by a lamp load, consisting of four parallel-connected 12V 120mA globes. We've elected to use globes rather than resistors to reduce heat generation inside the case.

When the gate of Q4 is driven high by IC3 (pin 16), it switches on and connects the globes across the battery. Surge current through the MOSFET is limited by resistor R17.

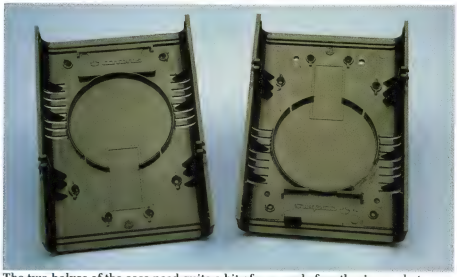

The two halves of the case need quite a bit of surgery before they're ready to accept the completed PC boards. This photo shows about half of the work complete, with the posts removed but the circular and smaller rectangular sections yet to receive the treatment.

(3) A-D converter: the 10-bit A-D converter in the LTC1325 can be programmed to sample voltages from a number of different sources. In this design, it is used to read the battery voltage and the DC rail voltage.

Battery voltage is picked off at the junction of D2 and PTC1, where it is filtered by R15 and C8 before being applied to the V_{BAT} input (pin 15) of IC3. ZD3 and R16 provide over-voltage and reverse battery protection.

The input range of the A-D converter is just 0-3V, so the voltage applied to the V_{BAT} pin must be divided down to suit. This is handled internally by a programmable attenuator, which supports division ratios of 1 to 16.

The second A-D input is used to sample the DC rail voltage. Resistors R19 & R20 first divide the rail voltage by eight before applying it to the general-purpose A-D input on pin 12 of IC3.

(4) Voltage comparators: the LTC1325 includes a number of comparators for monitoring minimum and maximum temperatures and cell voltages.

The reference (trip) levels for these comparators are supplied on pins 6 (LTF), 7 (MCV) and 8 (HTF). As temperature sensing is not used in this design, the low (LTF) and high (HTF) temperature comparators are disabled by tying them to fixed voltage levels. The same applies to the temperature sensor inputs on pins 13 (T_{AMB}) and 14 (T_{BAT}).

The necessary voltages are generated by a voltage divider string (R9-R12) which is supplied from IC3's internal +3V regulator (pin 1). Capacitor C8 provides filtering for the 3V supply.

(5) Serial interface: to orchestrate this myriad of functions, the microcontroller communicates with the LTC-1325 over a 4-wire synchronous serial interface.

Four port pins of the microcontroller (PB4-PB7) are dedicated to serial bus operation. The micro acts as the serial bus master, clocking data into the LTC1325 (D_{IN}) on the rising edge of the clock (CLK) signal and clocking data out (D_{OUT}) on the trailing edge.

During each serial transfer, the LTC1325 receives a 22-bit command word and transmits back an 8-bit status word and a 10-bit A-D conversion word.

Constant current source

At the beginning of every charge cycle, the microcontroller tests for a short-circuit or reverse-charged battery. If such a condition is detected, a separate constant current source is used to bring the battery voltage up to a minimum of 850mV before switching over to the main PWM current regulator.

An LM317 3-terminal regulator (REG1), together with R4, R5 and Q3 make up the constant current source. The short circuit current is equal to

Parts List For The SuperCharger

1 PC board, code 14111021, 72mm x 107mm (main)
1 PC board, code 14111022, 40mm x 78mm (front panel)
3 Mini 'U' TO-220 heatsinks (19°C/W thermal resistance) (Altronics H-0637)
1 TO-220 silicon or mica insulating washer and bush
1 inductor, 22µH 3.6A (L1) (Sumida CDRH127-220MC) (www.digikey.com)
1 miniature PC-mount Piezo sounder (PZ1) (Altronics S-6104)
1 PTC resettable fuse (polyswitch) 2.5A 30V (PTC1) (Farnell 772-380, Altronics R-4560A)
1 3A M205 anti-surge fuse (F1)
2 M205 PC-mount fuse clips
1 20-pin IC socket (machined-pin type, for IC2)
1 red PC-mount pushbutton switch (S1) (Altronics S-1095)
3 grey PC-mount pushbutton switches (S2 - S4) (Altronics S-1094)
4 low-voltage bezels (Jaycar SL-2620, DSE P-8050)
4 12V/120mA LES (Lilliput) globes to suit above (Jaycar SL-2652)
1 rubber grommet to suit figure 8 cable
1 16VAC 1.5A plugpack (Altronics M-9325, DSE M-9668)
1 small cable tie

Hardware

1 135 x 94 x 47mm (L x W x H) instrument case (Altronics H-0470)
4 10mm (diameter) adhesive rubber feet
2 M3 x 16mm countersunk head screws
4 M3 x 9mm tapped spacers
3 M3 x 6mm nylon screws
3 M3 x 6mm nylon nuts
2 M3 x 6mm spacers
8 M3 x 6mm screws
7 M3 flat washers
4 M3 nuts

Semiconductors

1 MC34064P-5 under-voltage sensor (IC1) (Altronics Z-7252)
1 AT90S2313-4 or -10 microcontroller (IC2) programmed with SCHG.HEX & SCHG.EEP
1 LTC1325CN battery management IC (IC3) (www.linear-tech.com)
1 TS952IN dual op amp (IC4) (Farnell 332-6378)
2 LM317T adjustable voltage regulators (REG1, REG2)
1 BC337-25 NPN transistor (Q1)
1 MTP23P06V P-channel MOSFET (Q2) (Farnell 259-639)
1 2N7000 N-channel MOSFET (Q3)
1 MTP3055E N-channel MOSFET (Q4)
4 BC327 PNP transistors (Q5-Q8)
1 KBL404 diode bridge, 4A 400V (DB1)
1 1N4148 diode, 150mA 75V (D1)
1 1N5245B zener diode, 15V 0.5W (ZD1)
1 1N4740A zener diode, 10V 1W (ZD2)
1 1N4744A zener diode, 15V 1W (ZD3)
14 red LEDs, 3mm high efficiency (LED1-LED14)
1 4MHz crystal, parallel resonant, HC49/4H package (X1) (Farnell 221-569)
2 MBRS340T3 Schottky diodes, 3A 40V (SMD) (D2, D3) (Farnell 878-390)
1 GS1G diode, 1A 400V (SMD) (D4) (Altronics Y-0174, Farnell 547-529)
1 SMCJ24A Transient Voltage Suppressor, 24V 1500W (SMD) (TVS1) (Farnell 167-447)

Capacitors

3 1000µF 50V PC electrolytics (C2-C4), 26mm (H) x 16mm (Dia.)
1 33µF 16V tantalum (C18) (Jaycar RZ-6665)
1 22µF 25V tantalum (C9)
2 10µF 25V tantalum (C6,C15)
1 4.7µF 16V tantalum (C8)
1 1µF 50V monolithic ceramic (C10)
1 220nF 63V MKT polyester (C1)
1 220nF 25V multilayer ceramic (SMD 0805) (C5) (Altronics R-8641)
2 100nF 63V MKT polyester (C7, C13)
2 100nF 50V multilayer ceramic (SMD 0805) (C16,C17) (Altronics R-8638)
1 470pF 50V ceramic disc (C14)
2 27pF 50V multilayer ceramic (SMD 0805) (C11,C12) (Altronics R-8539)

Resistors (0.25W, 1%)

1 100kΩ (R2)
2 47kΩ (R3,R7)
3 15kΩ (R8,R9)
1 12kΩ (R12)
1 10kΩ (R13)
1 9.1kΩ (R19)
1 6.8kΩ (R10)
1 5.6kΩ (R11)
1 4.7kΩ (R6)
1 3kΩ (R14)
4 2.7kΩ (R30-R33)
1 1.8kΩ (R25)
4 1.5kΩ (R26-R29)
1 1.3kΩ (R20)
1 1.2kΩ (R23)
1 1kΩ (R4)
4 330Ω (R34-R37)
1 240Ω (R24)
1 220Ω (R18)
1 100Ω (R15)

Resistors (0.5W, 1% & 5%)

1 470Ω 0.5W 1% (R16)
1 560Ω 0.5W 1% (R1)
1 22Ω 0.5W 1% (R5)
1 1Ω 0.5W 5% (R17) (Farnell 333-189)

SMD Resistors (1W, 5%)

1 0.68Ω thick film power (SMD 2512) (R22) (Farnell 310-4692)
1 0.1Ω thick film power (SMD 2512) (R21) (Farnell 310-4590)

Connectors & cable

2 2.5mm PC-mount DC sockets (CON1, CON2) (Altronics P-0621)

the ADJ pin reference voltage (1.25V) divided by R5 (22Ω) – ie, about 57mA.

The micro controls the current source via port pin PB1 and Q3, an N-channel MOSFET. Diode D4 prevents the battery discharging back through REG1 when power is removed.

Construction

Construction of the SuperCharger is straightforward, with all the parts mounted on the two PC boards referred to earlier. A separate PC board is used for the battery holders (to be described next month).

1 10-pin dual-row shrouded PC-mount header (CON3) (optional, see text)
1 10-pin 2.54mm pitch single-row PC-mount header (CON4) (Altronics P-5500)
2 2-way 5mm pitch terminal blocks (CON5, CON6) (Altronics P-2034)
1 10-pin 2.54mm pitch single-row 90° PC-mount header (CON7) (Altronics P-5520)
2 10-way header sockets to suit CON4 & CON7 (Altronics P-5480)
600mm light-duty hookup wire
400mm medium-duty (5A) figure 8 cable
170mm 10-way rainbow cable
300mm (approx.) 0.71mm tinned copper wire for links

Additional items for in-car use
1 2.5mm DC line plug
1 cigarette lighter plug
1.5m medium-duty (5A) figure-8 cable

High-current battery holder (optional)
PC board, code 14111023, 134mm x 74mm
AAA PC-mount single-cell holders (Farnell 301-061) **-and/or-**
AA PC-mount single-cell holders (Farnell 301-073) **-and/or-**
1/2 AA PC-mount single-cell holders (Farnell 174-725)
1 2-way 5.08mm pitch cable-mount terminal block plug (Altronics P-2512)
6 2-way 5.08mm pitch 90° PC-mount terminal block sockets (Altronics P-2592)
4 10mm (diameter) adhesive rubber feet

Miscellaneous
Neutral cure (non-acetic) silicone sealant, heatsink compound, battery holders to suit application (see text).

The following instructions are presented in a specific order, designed to make construction a little easier. We suggest that you complete each step in the order given before proceeding to the next. We'll begin with the case preparation.

Case preparation

To prepare the case, first split the case halves apart and place them side by side on your bench. You'll notice that both halves are identical. Each has six mounting posts, a small rectangular-shaped area for a 9V battery, and a circular area for a loudspeaker. All of these protrusions must be removed, so that no more than about 0.5mm of material remains proud of the surface.

The posts can be removed quickly and efficiently with an oversized drill. Choose the largest size that will fit in your drill chuck. Alternatively, you can cut them off with a sharp knife. If you do use a knife, cut off the post a few millimetres above the surface first, then gradually trim it away until you've removed the remaining stump. The same advice applies to all the other sections; remove small slivers at a time, rather than trying to remove large sections right at the base with the first cut.

By the way, we've found that the best knife for the job is one that has a flexible blade. Stanley make a suitable utility knife (the type with 'snap off' blades). But be careful – very careful. It's so easy to slip with these and if you're applying a lot of pressure, you could easily remove more than a post!

The front-most section of the rectangular battery area is perhaps the most challenging. Note how it also forms part of the panel-retaining groove. Do not remove all of this section; leave about 2mm or so proud of the surface. Obviously, the panel-retaining grooves must not be damaged, as they're the only means of securing the panels when the case is finally reassembled. We placed a layer of masking tape over the front edge of the groove (the part that's visible when the case is closed) so as not to mark it with the knife.

OK, with that job out of the way, choose one half of the case as the bottom. Orient it so that the cooling slots are closest to you; this will be the front end. Slip one of the panels into place in the rear end grooves and position the main PC board on the bottom, right side up (copper side down). What we're going to do now is use the PC board as a template to mark out the four mounting holes.

Referring to the overlay diagram in Fig.3, make sure that you have the rear of the PC board towards the rear of the case (CON1, CON2 & CON4 go to the rear). Push the board hard up against the rear panel and then centre it exactly between the left and right sides of the case. Now mark out the four PC board mounting holes with a pencil or metal scribe.

Remove the PC board, gently centre-punch your marks and drill the case to take 3mm screws. As with any drilling in soft plastic, we strongly recommend that you start with a small drill size and work up to the correct size in a number of steps.

Next, we'll prepare the front and rear panels. Begin by placing one of the panels 'rough' side down and position the front panel PC board *exactly centred on the panel, with the copper side facing up*. You should find that the PC board is marginally smaller in height than the panel. In addition, the corners of the board should not overhang the curved corners of the panel. If the board is larger in any of these dimensions, then you will have to file it down to size.

The next job is to mark out the two mounting holes, four switch positions and 14 LED positions. There are two ways this can be achieved. First, you can choose to photocopy the template shown in Fig.6, cut it out and tape it to the panel. It's then just a matter of centre-punching through the template to mark out the drilling positions.

Alternatively, you can mark directly through the PC board with a pin or other sharp instrument, and use a scribe and straight-edge to locate hole centres for each component. This method may be slightly more accurate but has a higher degree of difficulty.

Finally, drill the holes to size, finishing off the switch holes with a tapered reamer. Note that the switch holes will need to be slightly larger that the switches themselves to prevent jamming.

The rear panel can now be prepared using the photocopied template method described above.

Main PC board assembly

Before mounting any components on the main board, it's important to check that the holes for the heatsink tabs have been properly formed. To do this, select one of the heatsinks and loosely affix an LM317 regulator

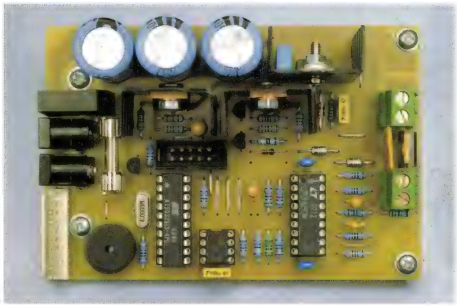

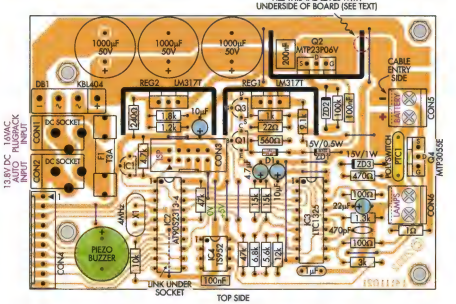

Fig.3: the overlay diagram for the top side of the main PC board. Note that there are several small differences between this diagram and the prototype shown in the photograph directly above. As explained in the text, the three heatsinks need to be trial-fitted before assembly begins.

using an M3 screw and nut.

Using the overlay diagram (Fig.3) as a guide, temporarily insert the assembly into the REG2 position. If all is well, the heatsink tabs should be a firm fit in their respective PC board holes. In addition, the three regulator leads should slip easily into their holes. If not, this suggests that the tab holes are misaligned and/or incorrectly sized.

Use a fine jeweller's file to adjust the heatsink tab holes as you see fit, being careful not to file into any of the adjacent copper. Ideally, the holes for the tabs should be shaped exactly like the tabs themselves; ie, slotted rather than circular. You'll need to repeat the procedure for the other heatsink positions (REG1 & Q2) as well.

In addition, the heatsink for Q2 requires a small modification. The left side tab (as shown in Fig.3) must be filed down so that it is level with the underside surface of the PC board when installed. Do not remove the entire tab, just enough to achieve the desired result!

Cloning gets the nod

That job complete, let's get on with the assembly. We'll begin by mounting all of the surface-mount (SMD) components on the copper side of the board.

Referring to the overlay diagram of Fig.4, first identify the mounting positions for each of the SMD components. Now prepare the pads/tracks as necessary, ensuring that they are tinned and free of excess solder.

Mount the five capacitors first and follow up with diode D4. You'll need a fine tip on your iron (eg, 0.8mm), fine solder and probably some 0.76mm desoldering braid as well. To prevent overheating these miniature components, apply your iron to the pad/track first, not the component. You'll need a third hand (who said genetic engineering is pointless?) to hold the parts in position while soldering.

For the remaining (larger) components, step up a couple of tip sizes. Note that diodes D2, D3, D4 and TVS1 are all polarised components, so they *must* be oriented as shown on the overlay diagram.

Once all the SMD parts have been installed, inspect your work with a magnifying glass. Check particularly for fine solder bridges between the tracks and pads.

Top side assembly

OK, let's turn our attention to the top side of the board. Referring to Fig.3, begin by installing the 13 wire links, followed by all the resistors. Diode D1 and zener diodes ZD1-ZD3 can go in next, taking care to align the banded ends as shown.

Next, install the socket for IC2, followed by all of the connectors. The keyed (pin 1) side of CON3 should face towards IC2. Also, note that the two terminal blocks (CON5 & CON6) must have their cable entry sides facing towards the middle of the board, which is the reverse to what you might expect. Before soldering each connector, ensure that it is seated firmly against the PC board surface.

All of the capacitors, with the exception of the three 1000µF electrolytics, should be installed next. Make sure you have the marked (positive) sides of the tantalum capacitors oriented as shown. Follow with the three TO-92 packages (IC1, Q1 & Q3), the M205 fuse clips, crystal (X1), the piezo buzzer, polyswitch PTC1 and diode bridge DB1.

Next, loosely assemble the three TO-220-packaged devices (REG1, REG2 &

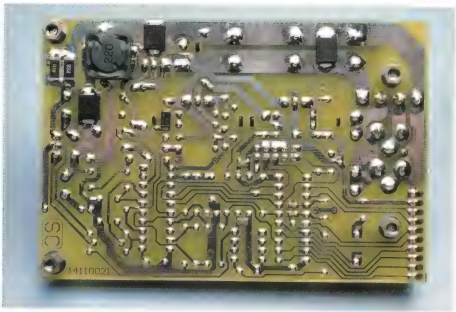

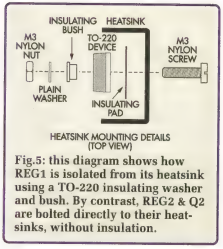

Fig.5: this diagram shows how REG1 is isolated from its heatsink using a TO-220 insulating washer and bush. By contrast, REG2 & Q2 are bolted directly to their heatsinks, without insulation.

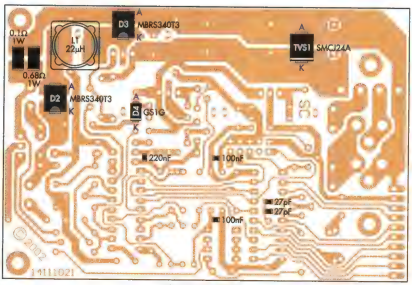

Fig.4: the copper side of the board, showing the placement for each of the surface-mount components. Again, there are some minor differences between this and the prototype photo shown above. Note that the cathodes of the MBRS340T3 diodes (D2, D3) are marked with a semi-circular 'notch' rather than the usual white band.

Q2) onto their heatsinks using M3 nylon screws, nylon nuts and steel washers. Place a thin smear of heatsink compound on both the heatsink contact area and rear of the devices before assembly. REG1 must be electrically isolated from its heatsink using a TO-220 insulating washer and bush (see Fig.5). The other two devices (REG2 & Q2) should *not* have insulators fitted.

Mount REG2 first, making sure that the heatsink is perfectly square on the PC board surface. Push the LM317 regulator all the way down the heatsink slot until it can go no further and then solder it into position and tighten up the mounting screw. Repeat this procedure for REG1 and Q2, making sure that the tab of Q2's heatsink (shortened earlier) does not interfere with the SMD inductor (L1) or short out to either of the inductor's terminals.

Now install the three 1000µF electrolytic capacitors. They must be seated firmly on the PC board surface before soldering. Finally, fit 9mm tapped spacers to the four mounting positions.

At this point, IC2, IC3 and IC4 should be the only components not installed. Do not install them until after you have performed the power supply checks detailed next month.

Next month, we will describe the front panel PC board and battery holder assemblies and show you how to use the new charger. **SC**

Fig.6: these are the full-size artworks for the front and rear panels of the SuperCharger.

21st Century Cat's Whiskers

Perhaps you wonder what cats and electronics have in common? It transpires that both pet food and the pet food container show pleasing microwave responses. If you'd like to get into the world of Wi-Fi, treat your cat – purchase a large (shallow) tin of sardines and read on !

by Stan Swan*

In an age when abbreviations and acronyms abound (not bad alliteration, eh?), it's perhaps very unfortunate that recent computer networking breakthroughs have been christened "Wi-Fi".

Naturally this is often confused with "Hi-Fi" (music) or "Firewire" (high speed data over cable), with attendant frustration! Further mentioning "Bluetooth" may result in mutterings about the electronic age having gone techno babble mad. But mad or not, this new technology shows much the same mainstream potential as the emerging Internet did in the mid 1990s. Back then, few people knew of "www" – and even less cared!

Wi-Fi, an abbreviation of Wireless Fidelity, refers to low power short range wireless computer data communications, formally specified as IEEE802.11, developed by the Institute of Electrical and Electronic Engineers (IEEE).

Signals are at microwave frequencies (around 2.4GHz) in a globally-licence-free ISM (industrial, scientific and medical) part of the radio spectrum. A large part of the appeal of Wi-Fi seems to relate to its innovative democratic spectrum sharing.

Although the band is already cluttered by intentional or non-intentional signals from such things as microwave ovens, video/TV extenders and cordless phones signals, Wi-Fi nimbly extracts wanted signals from the noise – in the manner of a cyclist weaving through heavy city traffic.

Like such flea power cyclists (compared to other traffic), Wi-Fi signals are typically just 30mW. This is similar to the energy needs of a LED and is about one-tenth that of a cell phone!

Wi-Fi uptake has been particularly dramatic since the September 11th 2001 events, partly fueled by a surge in notebook PC adoption with their flexible computing benefits but also due to a recognition of cabled networking installation costs and layout problems.

Behind a typical desktop PC is normally a snake's pit of cables of course, with users often petrified to touch anything around the back. A desk-bound PC is perhaps akin to mobile phones only being used when tethered to chargers, or digital cameras when docked at the computer!

And although the standard is only a few years old, important enhancements have already occurred, with the b,a and g versions having crucial differences:

IEE802.11 – The original 2Mbps at 2.4Ghz. Began about 1998 but now obsolete.

IEEE802.11b – Today's 11Mbps, 2.4GHz. Looks the most durable form.

IEEE802.11a – Quieter 5GHz spectrum and 54Mbps, but showing less range.

IEEE802.11g – 54Mbps but at 2.4GHz again. Likely release 2003.

The new amateur radio?

I was raised in rural New Zealand (Nelson) and in my teens took to ham radio with relish, partly as a communication aid in an era when even toll calls were a novelty. Much of my hands-on experience was with the 3.5MHz (80m) band, where signals had wavelengths in tens of metres (compared to Wi-Fi's millimetres).

Dimensions of aerials then were some 1000 times greater, with nerve wracking ascents of towering pine trees a consequence.

Wi-Fi antennas, in contrast, can be rustled up on a table top with just simple tools and a tape measure.

A key radio fact needed for DIY antennas is the relationship between signal frequency and antenna dimensions. In fact, all waves follow such a formula:

Propagation speed (metres/second) = Frequency (Hertz) x Wavelength (metres).

Radio waves slow down slightly when in conductors but for most purposes their speed can be assumed to be that of light: 300,000km per second (3×10^8 m/sec).

This means 2.4GHz (Giga means x 10^9) Wi-Fi signals have a wavelength of approximately:

$3 \times 10^8 / 2.4 \times 10^9 = 125\text{mm}$.

The symbol for wavelength is the Greek alphabetical character "λ" (Lambda).

The ISM spectrum in fact offers 11 Wi-Fi channels between 2.4 – 2.48 GHz, so the actual dimensions relate to the channel frequency used.

When talking about designing antennas, you'll often find expressions involving fractions of wavelengths, especially quarter wave (¼ λ) and half wave (½ λ). At 2.4GHz ¼ x 125mm = about 31.25mm, the reason why this length is often noted in these articles.

Phew – that's almost all the maths! Now – what about those sardines? Patience!

Microwave behaviour

Microwaves travel best "line of sight" – that is, short range and they don't bend to follow either the Earth's curvature or geographic features such as mountains.

They are easily absorbed by concrete, steel, hills and even (full leaf) vegetation. (That's why you rarely, if

A similar type of "bow tie" antenna to that on the opposite page, operating from a notebook computer running "Netstumbler" software. But this one is built onto a stock-standard CD (taking advantage of the metallised layer under the plastic). Building these antennas is easy – we show you how later in this article.

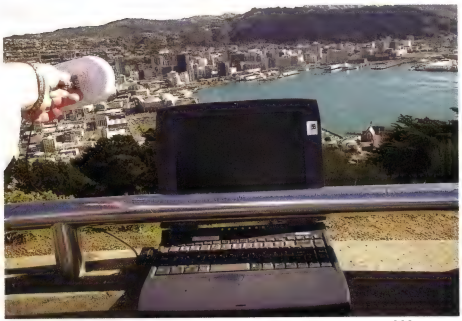

Nice view – but that's not why we're showing it. Most businesses would be horrified to find that you can listen in to them using Wi-Fi – because few have robust security built into their wireless LAN systems. Here the antenna is aimed at the Wellington (NZ) CBD, about 3km away – and the signals abounded!

ever, see a satellite TV reception dish with a tree in front of it. Satellite TV is another service which uses microwave bands.

In contrast to the satellite TV signal paths which are many thousands of kilometres, Wi-Fi coverage around a home or office will usually only amount to around 50 metres or so, with timber walls, floors and partitions absorbing signals significantly. But with a clear view (perhaps innocently via a window), signals can travel many kilometres!

Elevated directional antennas at each end of the link can push this up to tens of kilometres. Data rates may reduce over such distances but even if as "low" as 1Mbps, they are still some 20 times a normal dial-up modem speed and capable of handling simultaneous data, Internet sharing, audio, phone calls and even video (MS NetMeeting is especially effective).

The present Wi-Fi world record distance, some 35km across water, was attained in Chile using small parabolic dishes, with the curvature of the Earth eventually a factor.

Ahh, Chile – is this where the sardines come in? Almost – but first we'll look at hardware needs, with a South American river (the Orinoco) to the fore.

Wi-Fi cards

Only a modest selection of cards were available in 2002 but these included PCMCIA, PCI and USB types. A major limiting factor of many PCMCIA and inbuilt PCI cards relates to their lack of an external antenna connection.

Not only will the performance therefore be at the mercy of the card's small inbuilt aerial (and perhaps shielded by PC metal work but will also be very close to computer "noise".

For more flexibility an external antenna is usual crucial and for this the Hermes chip set Lucent/Agere/Avaya "Orinoco" PC card is virtually the de facto standard. Numerous other makers (Apple, HP-Compaq and Dell, etc) rebadge this card and it's the best supported for monitoring software such as Netstumbler.

The one drawback: the Orinoco PCMCIA antenna connection is very small and needs a costly "pigtail" connector to externally link it.

USB has significant appeal, since not only can the units easily swap between PCs but the radio signal decoding is done within, with energising power also USB supplied.

Cheap USB extension leads and connectors can be used (respecting the USB 5-metre cable limit), as only digital signals (rather than microwave) run along the lines. A further bonus means the whole unit can be easily shifted around, or hung above head height on the wall, for a signal "sweet spot".

However, due to the decoding overhead there will be a signal speed reduction.

My experiences show that indoor Wi-Fi typically has such a maze of reflected signals (from metalwork, wiring, people, etc) that even shifting the Wi-Fi hardware a mere handspan may hugely alter signal strength.

Such shifts are of course NOT easy to do with a desktop PC, and even a notebook may need sliding around a desktop for best connections.

Software

Most cards have installation software for Windows (especially XP) Apple Mac and even Linux. Configu-

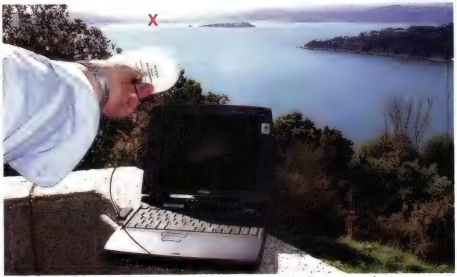

Another view across Wellington harbour, this time looking towards Petone, some 10km away (marked by the red 'X'). A solid Wi-Fi signal was detected on the notebook computer.

To avoid the cost of the espensive pigtail, for initial DIY antenna trials you *could* just carefully expose the 3mm coax braid and central wires to make a simple push-on connection to the card socket. This can be held in place with a piece of tape. Do this at your own risk, though – insertion losses may be significant!

ration occurs in either Ad Hoc (peer to peer) or Access Point modes and good signal strength and auditing features usually apply. However the standout monitoring software, not yet able to be run on all cards, is Netstumbler.

Initially developed for detecting the presence of nearby wireless LANs (WLAN) with a view to perhaps accessing them, Netstumbler also offers ready antenna tuning applications.

It's perhaps worth borrowing an Orinoco card and a notebook PC running Netstumbler, just to fine-tune and audit your Wi-Fi setup and coverage.

Incidentally, even with a simple antenna, Netstumbler usually reveals dozens of WLANs (many of them insecure) during a drive around most cities now!

Several sites noted here in Wellington (NZ) had default passwords and signals easily monitored from nearby line-of-sight hilltops and parks.

The owner of a simple USB home Internet sharing wireless LAN, detected near my workplace, was astounded to know we were able to receive his signals streets away when he had difficulty in his house! Fortunately, he had at least enable Wired Equivalent Privacy (WEP) security, although even that may now be broken (over time) by determined snoopers using AirSnort under Linux.

External Antenna

Classic antenna theory says that the best transmitting antenna also makes the best receiving one (reciprocity) but this needs modifying when, in spite of good signal strengths, local noise may need nulling out.

Some antenna types may suit minimising signals from a nearby "noisy" microwave oven or cordless phone. Blue-tooth, the very short range (under 10 metres) wireless technology just finding use with some mobile phones and PDAs, seems especially noisy to Wi-Fi.

Numerous Internet websites and usergroups now offer designs ranging from 5-minute specials (using much over-rated Pringle cans, etc) to converted satellite TV parabolic dishes.

Aside from cost and assembly skills, further factors to consider are coaxial cable runs, specialised connectors, weather proofing and eventual intended use.

Parabolic dishes offer very high gain

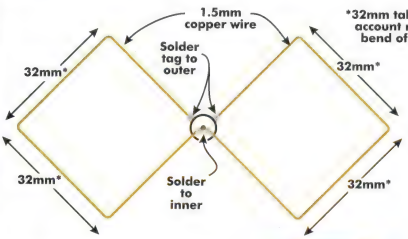

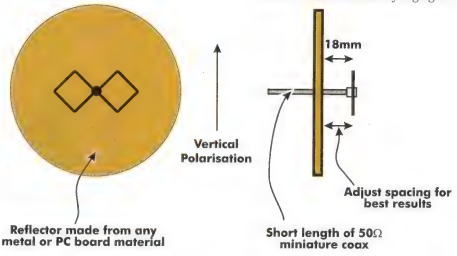

Here's all the dimensions for building your own sardine-tin special! The 31.25mm quarter-wavelength has been rounded up to 32mm to take into account the radius of the bend. Original drawings of this antenna first appeared on this website: www.wlan.org.uk/simple_double_quad.gif

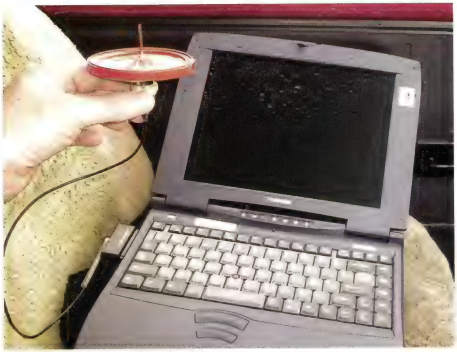

The quarter-wave omnidirectional (ie, radiates in all directions). Performance might not be as good as the bow-tie but it's a much simpler antenna. And even this can give a good account of itself in Wi-Fi hotspots (good signal strengths).

but need accurate alignment and robust installation and hence are hardly tempting to slip in with your notebook PC for use at the library!

If omnidirectional coverage is needed, the inconvenience of adjusting a directional antenna may be a factor too, especially when mounted outdoors.

In my experience, perhaps the best high gain, easily constructed type, is the "plumbers special" helical – but this may rather intimidate your neighbours or workmates!

Sorry, more maths

High school maths log theory time! Antenna gain is measured in decibels (dB), with a 3dB gain being equivalent to doubling power (recall $\log_{10}2 = 0.3010$?).

Each 6dB gain will double the theoretical range, so a 12dB gain antenna (about as good as homebuilt gets) should yield four times the range. With one of these at each end, eight times the link range should result, meaning perhaps 4km rather than 500 metres.

For short-range work, especially in built-up areas, such large changes result from diverse reflections so that it's difficult to be exact on gains and losses.

Each time you make a connection, there is signal loss. Even purpose-designed types for microwave levels, such as N-connectors, have loss. The better the connector, the lower the loss – but for better you can also use the word dearer. They also usually require special tools for assembly.

With this in mind, it may be better to standardise on cheaper connectors (such as BNC) and coax if only to ensure a sweet spot for one's signal. Several BNC connectors (at maybe 1dB insertion loss each) and maybe 3m (say 3dB loss) of coax loss may overall be tolerable if a 20dB (that's 100 times) improvement results from a better signal take off.

Cost savings may be considerable, especially when specialised crimping tools are not needed.

"Sardine can" design (at last)

For simplicity, a bi-quad "Bow-Tie" design offers good gain and front-to-back ratio plus directivity and compactness. Ideally the side arms should be $\lambda/4$ (= 31.25mm) each, as should the wall height, with best matching at 15mm (= $\lambda/8$) spacing from the can reflector bottom.

But you don't have to be this accurate: diverse variations I've made have not shown things to be too critical. Even the reflector seems non-critical, with an old compact disc (exploiting its metallised layer) being pushed into good service!

In the spirit of "make it do, use it up, wear it out", oval sardine tins have shown sprightly (should that be "spratly"?) performance, certainly much better than bulkier tin-can waveguides.

The overall size neatly fits into a padded pencil case incidentally, yielding a satisfying integrated design when placed near one's notebook PC.

In "downunder" spirit I was determined to push Milo cans into antenna service but have so far had little success (Milo was first introduced 1933

Instead of going to the office PC, let the office LAN come to you. Networking out of thin air . . .

References and URLs:

For convenience these are also available hotlinked at http://manuka.orcon.net.nz

www.arrl.org/catalog/?item=8047 *" ARRL Antenna Book" 19th Ed. (The American Radio Relay League amateur radio enthusiast's standby)*

www.antennas3.com *"Antennas for all Applications" 3rd Ed. Kraus and Marhefka (The classic professional's text).*

www.netstumbler.com *"Netstumbler" and PDA version "Ministumbler" download site*

alt.internet.wireless *(Usegroup: access via Google Groups) for helpful advice , experiences and opinion*

www.oreillynet.com/cs/weblog/view/wlg/448 *Pringle can antenna enhancement*

www.wlan.org.uk/tincan.gif *Tin can microwave antenna details*

www.wlan.org.uk/simple_double_quad.gif *Pictures and details of the basic "bow tie"*

http://trevormarshall.com/biquad.htm *Details of bow tie used with parabolic reflector*

www.wireless.org.au/~jhecker/helix/helical.html *Jason Heckers high gain helix*

http://helix.remco.tk *Helical cookbook*

www.saunalahti.fi/~elepal/antenna1.html *Cake tin homebrew short backfire antenna*

www.seattlewireless.net/index.cgi/PigTail *Sources for Orinoco Pigtail connectors*

www.seattlewireless.net/index.cgi/MicroTVAerial *Very small 2.4GHz Yagi*

www.hyperlinktech.com/web/connectors.html *Microwave connectors listings and pictures*

www.warchalking.org *Warchalking background and news.*

Sydney Royal Show). The wide Milo cans have great signal capture potential but show trivial gain beside the Bow-Ties.

"Dog tucker" omnidirectional.

By now your cat's probably happy with the sardines but your dog may feel left out. So feed him and build another antenna!

For sites with good signal strength, simple quarter-wave tin lid designs have shown to be very effective. Select a lid or bottom on a tin can – as wide as possible since this becomes the radiating ground plane – and then drill out to take an N (or BNC ?) connector. Now remove the lid with a can opener and maybe use the plastic cover to protect yourself from sharp edges. Solder a sturdy wire of 31mm length ($\lambda/4$) to the central post.

Because all the metal could bleed away the heat from a single soldering iron, consider enlisting a mate to hold a second iron. For really fine tuning a thin brass tube (perhaps from a hobby shop) can be used instead, with a small self-tapping screw in the top adjusted for best radiant length. This set up may be neatly attached to the top of a notebook PC's screen with Velcro (careful of the LCD screen!), or even magnetically attached to a car roof when mobile.

At its present explosive rate of uptake, Wi-Fi looks set as an essential communication tool and is likely to be as rapidly adopted as USB has been. Already significant productivity gains have been noted, especially with meeting attendees being able to access up-to-date information via their Wi-Fi notebooks.

Business travellers find airport "hotspots" allow email access while awaiting flights and perhaps most promising of all, neighbourhood area networks (NANs) may cheaply offer fast datacomms to schools and communities presently near-strangled with slow dial-up links. Although security is still an issue, Wi-Fi overall looks mainstream bound.

*s.t.swan@massey.ac.nz

Warchalking!

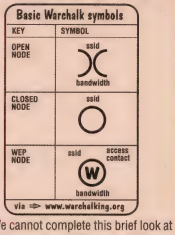

We cannot complete this brief look at W-Fi without also looking at the very new – and somewhat controversial – subject of Warchalking.

What is Warchalking? It's a very unfortunate term indeed, since it implies warmongering and scheming.

The 1930s US depression saw subtle "hobo markings" scratched on fences by tramps, informing others of a dry barn, kind housewife or angry sheriff. Warchalking follows this signage technique – but with more high-tech outcomes in mind.

"Chalking " arose in London only in late June this year, but has already become globally commonplace, thanks of course to the Internet.

The term dates from the 1983 movie "WarGames", where a teenager modem-dialled random phone numbers and inadvertently linked to a defence computer. Such "wardialing" came to mean attempts (often automated) to access modems at unpublished phone numbers, perhaps with eventual hacking in mind. From an Internet perspective, such mischief now seems almost quaint!

Fast-forward 20 years. The Wi-Fi age has titled wireless drive-by WLAN snooping as "wardriving". With co-operation and productivity more the intent, chalk symbols arose mid-2002 as a symbolic alert to the presence and nature of nearby wireless LANs, especially those that are open for Internet browsing by passing handheld Wi-Fi devices. Some firms, particularly hotels and coffee shops, already now proudly display the symbols in an attempt to cultivate custom and goodwill. Others react with alarm to the concept. If you find such chalk symbols near your home or workplace, make sure it's not your bandwidth that's being mined unannounced. **SC**

CIRCUIT NOTEBOOK

Interesting circuit ideas which we have checked but not built and tested. Contributions from readers are welcome and will be paid for at standard rates.

Speaker-headphone switch for PCs

If you need to use a headset with your PC, then you will know how frustrating it is continuously swapping over speaker and microphone cables. This is even worse if the PC is parked in a dark corner and the hard-to-read writing on the sound card sockets is covered in dust.

This simple switch box eliminates all these problems. It sits on top of the desk and connects to the PC with stereo one-to-one cables. On the rear of the box are sockets for the PC speaker and microphone connections and the existing speakers. On the front of the box are the sockets for the headset microphone and headphones, an input for an external microphone and two switches.

One switch is used to direct the sound card output from the PC to either the existing speakers or the headphones. The second switch connects either the headset microphone or the external microphone to the input socket of the PC sound card. The switches used were 3 position 4 pole rotary switches with the last pole unused and adjusted for 2-position operation. All sockets were stereo 3.5mm types.

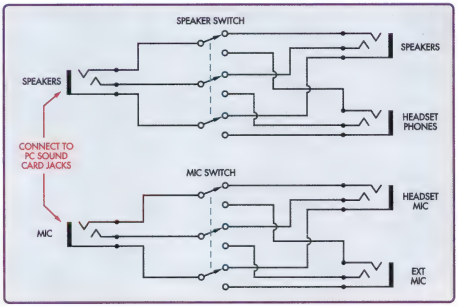

This multiple switching arrangement is very flexible and is especially handy if you want to use an external microphone while monitoring with headphones. The ground wire as well as the left and right wires are all switched to prevent noise that could otherwise be induced into the microphone input through joining separate earths. For the same reason, a plastic case is used so that the earths of the sockets are not shorted together as would happen with a metal case.

You will require two additional short stereo extension cables to connect the box to the PC.

Leon Williams,
Bungendore, NSW. ($35)

Simple Cat.5 network tester

This circuit came from a need for a "quick and dirty" network tester that could be operated by one person. All the commercial units I tried required a person at the other end to check the remote LEDs, as the transmitters could not be made to cycle through the test continuously to allow one person to check both ends. It must be noted that this unit will only check for pair continuity, pair shorts, crossed wires, and shorts to other pairs. It will not test bandwidth, etc.

Operation is fairly basic. Half of the 4011 quad 2-input NAND gate is an RS flipflop (IC1a, IC1b) which controls the other half, IC1c & IC1d, operating as a clock oscillator. You can either start and stop the oscillator running by pressing the Start and Stop switches or by virtue of diode D1 connected to pins 12 & 13, use the Stop switch to allow manual clocking of the 4017 counter. The 4017 drives one of eight LEDs and the lines to the RJ45 socket.

An output "High" on the 4017 decides which line is under test, and if the circuit is complete, the test LED's current is "sunk" by the 4017 and the LED will light. If the corresponding test LED on the remote fails to light, then there is a short of that pair in the cable under test.

If more than one LED lights, it indicates a short with another pair. A dark test LED on the transmitter indicates that pair is open circuit.

"Start" starts the circuit cycling at a rate determined by the 470nF capacitor and 220kΩ resistor and "Stop/Step" stops cycling, steps through the lines, and when stepped so that no channel LEDs are alight, effectively switches the unit off with a standby drain current of less than a microamp.

Craig Stephen,
Cromwell, NZ.

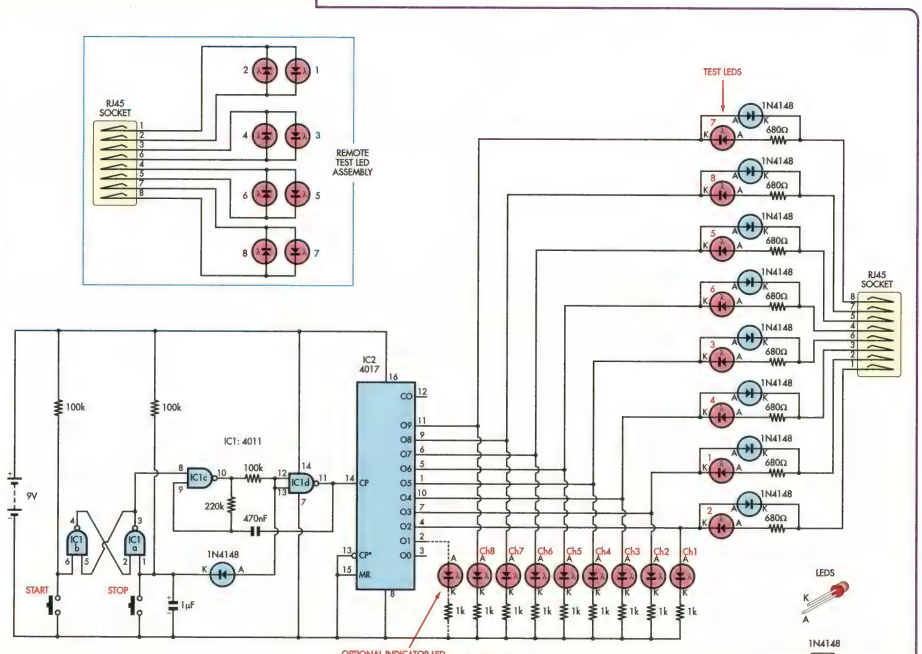
RJ45 SOCKET
REMOTE TEST LED ASSEMBLY
TEST LEDS
1N4148
680Ω
RJ45 SOCKET
IC2 4017
IC1: 4011
IC1c
IC1d
IC1b
IC1a
100k
220k
470nF
1µF
9V
START
STOP
1N4148
CO
O9
O8
O7
O6
O5
O4
O3
O2
O1
O0
CP
CP*
MR
Ch8
Ch7
Ch6
Ch5
Ch4
Ch3
Ch2
Ch1
1k
LEDS
OPTIONAL INDICATOR LED
IF CHANNEL INDICATOR LEDS ARE NOT USED

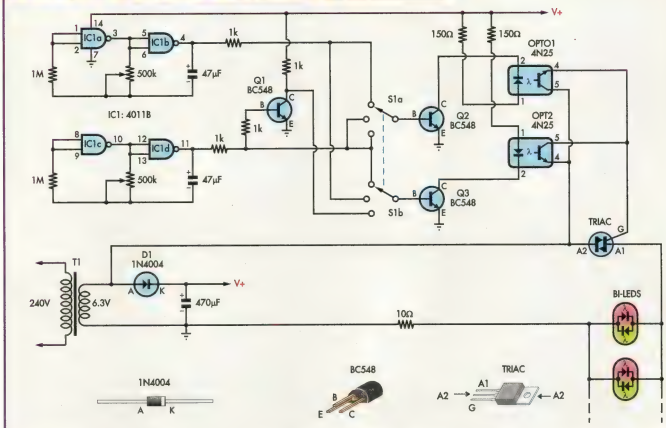

Using AC for LED Christmas lights.

This circuit uses low-voltage AC to drive a string of 50 or so bi-colour LEDs (two LEDs connected in inverse parallel). Power to the LEDs is controlled by the Triac and the two optocouplers which have their phototransistors effectively connected in inverse-parallel. Depending on which optocoupler is turned on, the Triac applies positive, negative or both half-cycles to the LEDs and so the colours can be red, green or in-between.

Switch S1 is used to select the pulses from two oscillators which are formed by the NAND gates in IC1 (4011B). This provides a variety of LED flash patterns, depending on the setting of S1.

Matthew Peterson, Manukau, NZ. ($40)

DC motor speed controller

This circuit takes advantage of the voltage drop across bridge rectifier diodes to produce a 5-position variable voltage supply to a DC fan or other small DC motor. It is not as efficient as a switchmode circuit but it has the virtues of simplicity and no switching hash.

The four full-wave bridges are connected so that each has two pairs of series diodes in parallel, giving a voltage drop of about 1.4V, depending on the load current. The rotary switch should have "make before break" contacts which should be rated to take currents up to about an amp or so. For higher currents, higher rated bridge rectifiers and a suitably rugged rotary switch (or solenoids) will be required.

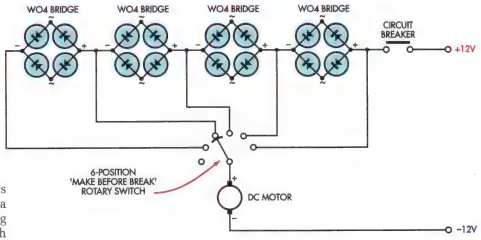

If you want smaller voltage steps, you could use the commoned AC inputs on the bridge rectifiers to give intermediate steps on the speed switch.

Stephen Butcher, Masterton, NZ. ($30)

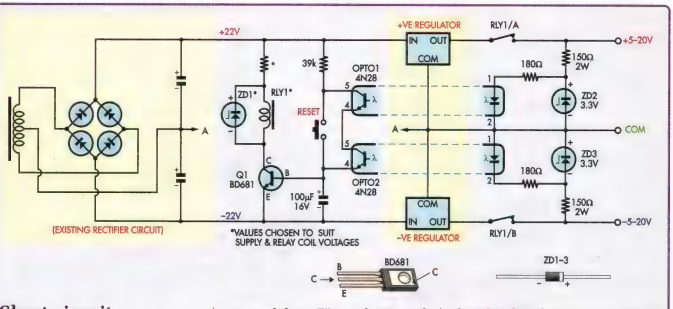

Short circuit protection for balanced supply rails

This circuit was designed to protect a dual rail power supply from shorts across the two rails. It uses an optocoupler to monitor each supply rail, with the internal LEDs powered from ZD2 and ZD3 and the associated resistors. While the LEDs are on, the optocoupler's internal transistors are both turned on which ensures that transistor Q1 is on and relay RLY1 is energised. If either rail is short-circuited, the associated optocoupler is turned off, robbing Q1 of base current and the relay then drops out to disconnect the supply rails.

Operation is restored by pressing the reset button. The value of ZD1 and the associated resistor should be chosen to suit the supply and relay coil voltages.

Mark Arnold,
Wurtulla, Qld. ($40)

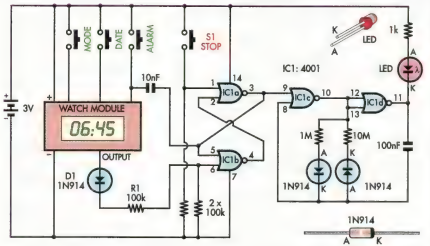

Tablet reminder uses watch module

This device is used as a reminder to take medicine every day. This device actually contains a crystal watch and a 4001 quad 2-input NOR gate with two of the gates (IC1a & IC1b) wired as an RS flipflop.

The watch is set to "tablet time", usually mornings, when an alarm is activated with a high signal fed via diode D1 which sets the RS flipflop and enables the oscillator comprising gates IC1c & IC1d. This drives the LED with a 10% duty cycle.

The 10nF capacitor resets the watch alarm when positive voltage appears on pin 3 of IC1. The circuit consumes only 50µA with a 3V battery.

Rasim Kucalovic,
Liverpool, NSW. ($35)

CONTRIBUTE AND WIN!

As you can see, we pay good money for each of the "Circuit Notebook" contributions published. But now there's an even better reason to send in your circuit idea: each month, the best contribution published will win one of these superb Wavetek Meterman 85XT true RMS multimeters - valued at around $380! So don't keep that brilliant circuit secret any more: send it to SILICON CHIP and you could be a winner!

1 meter to win every month!

Contributions must be your own original work or a major adaptation and not published elsewhere nor submitted for publication elsewhere. SILICON CHIP's decision is final.

This compact 4-digit timing module forms the hardware "platform" for six different timing modules. In each case, the only change is the firmware programmed into the microcontroller that controls it. Need another type of timer? No problem; just change the microcontroller chip.

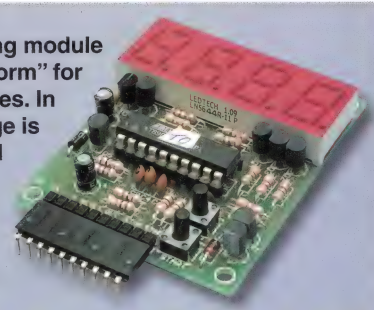

4-Digit Crystal-Controlled Timing Module

Just change the chip to build a Stopwatch, a Photographic Timer, a Frequency Meter or a Programmable Down Timer

THIS SIMPLE LITTLE module measures just 61 x 67mm and is basically a start/stop timer. It's crystal-controlled to ensure accuracy, features an open-collector NPN output and sports a 4-digit LED display.

Currently, there are six timer firmware ICs available. You simply specify which one you want to build. The choices available to you are as follows:

(1) **A Simple Photographic Timer** (K-148T1);

(2) **A Stopwatch with Pause** function (K148T2);

(3) **A 40kHz Auto-Ranging Frequency Meter** (K148T3);

(4) **A Programmable Down Timer** which counts down in minutes from a maximum of 10,000 minutes (K148-T4);

(5) **A Programmable Down Timer** which counts down in hours from a maximum of 10,000 hours (K148T5); or

(6) **A Programmable Down Timer** which counts down in seconds from a maximum of 10,000 seconds (K148-T0).

As supplied, the kit comes with option (6). If you want one of the other functions, the firmware (in the form of a different microcontroller IC) must be purchased separately. The documentation supplied with each option describes how it works.

Please note that, for this design, all source code is copyright and is not released with the firmware.

Main features

As already stated, the design features a 4-digit 7-segment LED display (with decimal points) plus an open-collector output. Depending on your application, this output can be used to operate a relay or sound a buzzer at the end of the timing period.

In addition, there are three inputs to the circuit: Reset, Start & Stop. The Reset input is a hardware reset to the microcontroller, while the Start & Stop input functions vary according to the firmware used.

All inputs are normally pulled high and may be pulled low by switches or relays, or by an open collector output (ie, when the transistor turns on).

Two on-board pushbutton switches are also connected across the Start & Stop inputs. These enable you to test the basic operation of the timer module without hooking up external hardware (apart from a power supply). Basically, they are there to help you

By FRANK CRIVELLI & PETER CROWCROFT

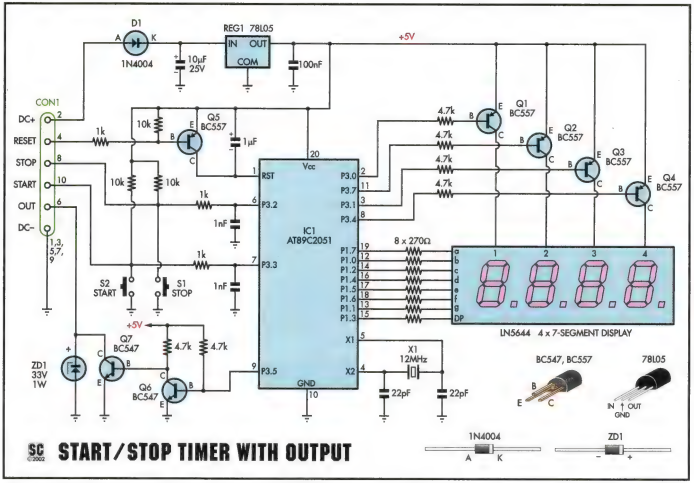

Fig.1: the circuit uses a single Atmel microcontroller (IC1) to drive a 4-digit LED display in multiplex fashion. Crystal X1 provides the timing, while Q6 and Q7 switch the output line. The circuit function can be altered by changing IC1.

get the unit "up and running".

To make the module easy to use, all the inputs and outputs are brought out to a single 10-way header pin. What's more, each input or output "pair" includes its own ground pin (see Fig.2).

Note that when using the output to switch a load, this load must be connected between the output pin on the PC board and a positive DC voltage. For example, to switch a 12V relay, connect the relay between the output pin and +12V.

Circuit details

Fig.1 shows the circuit details of the timer. It uses just one IC – an Atmel AT89C2051 microcontroller. This micro has 2KB of flash programmable and erasable memory and is compatible with the industry standard MCS-51 instruction set. A data sheet can be downloaded from Atmel's website at **www.atmel.com**

The microcontroller IC is preprogrammed to provide each specific timer function. This not only reduces the component count but also allows us to provide more features than are possible using dedicated logic ICs. And the overall cost is much lower.

A 12MHz crystal (X1) on pins 4 & 5 provides a stable clock signal. This particular value was chosen because the microcontroller divides the crystal frequency by 12 to produce its own internal clock signal. This gives us an accurate 1µs timebase for elapsed time measurement.

The display is a 4-digit, common anode, multiplexed, 7-segment display (LN5644). This means that all the LEDs in a single digit share a common anode (positive) connection. The cathodes (negative) of each segment (a-g) are connected across the four digits, forming a matrix. This minimises the number of pins needed to drive the display but requires a more

SPECIFICATIONS

Timing Range (Down Timer) ..... 0-10,000 seconds; or 0-10,000 minutes; or 0-10,000 hours
Timing Ranges (Photographic Timer) . 60, 90, 120, 300, 600 & 900 seconds
Frequency Ranges (Frequency Meter) ..... 0-10kHz & 10-40kHz (TTL logic)
Inputs ..... Start, Stop and Reset (active low)
Output ..... open collector NPN transistor, 100mA @ 30V
Power Supply ..... 9-12V DC @ 50mA
Display ..... 4-digit 7-segment LED with decimal point
Dimensions ..... 51 x 66mm
External Connector ..... 10-way right-angle SIL header (male or female)

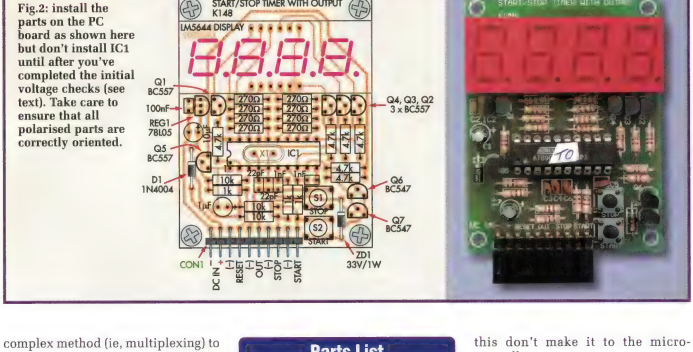

Fig.2: install the parts on the PC board as shown here but don't install IC1 until after you've completed the initial voltage checks (see text). Take care to ensure that all polarised parts are correctly oriented.

complex method (ie, multiplexing) to do it.

Multiplexing is a technique whereby each digit is turned on in sequence and then only for a short period of time. What's more, only one digit is on at any given time. In this design, each digit is turned on for 1ms in every 8ms. There is also a 1ms gap between one digit turning off and the next turning on. However, this is all much faster than the human eye can distinguish so it looks like all the displays are constantly on.

This effect is called "persistence of vision".

As shown in Fig.1, pins 13-19 of IC1 drive the display segments (and the decimal point) via eight 270Ω resistors. These resistors limit the maximum current that can flow through each segment. In addition, pins 2, 11, 3 & 8 (P3.0-P3.4) drive PNP transistors Q1-Q4. Each transistor switches the power to its corresponding display digit in response to a low-going signal from IC1.

Start & stop inputs

The Start and Stop inputs are connected to pins 6 & 7 of IC1 via low-pass filters consisting of 1kΩ resistors and 1nF capacitors. These inputs are normally pulled high via 10kΩ resistors and these resistors, along with the low-pass filters, reduce the chances of false triggering.

Note that the filter time constants are 1µs – input pulses shorter than this don't make it to the microcontroller.

Parts List

1 PC board (K148)
2 miniature pushbutton switches
1 12MHz crystal (X1)
2 10-pin IC socket strips
1 10-pin male header
1 10-pin female

Semiconductors
1 AT89C2051-24PC Atmel microcontroller, T0 firmware, IC1 (see text for other microcontroller options)
1 LN5644 4-digit, common-anode LED display
5 BC557 PNP transistors (Q1-Q5)
2 BC547 NPN transistors (Q6,Q7)
1 78L05 5V regulator (REG1)
1 33V 1W zener diode (ZD1)
1 1N4004 silicon diode (D1)

Capacitors
1 10µF 25V electrolytic
1 1µF 16V electrolytic
1 100nF monolithic
2 1nF ceramic
2 22pF ceramic

Resistors (0.25W, 5%)
8 270Ω (red, purple, brown, gold)
3 1kΩ (brown, black, red, gold)
6 4.7kΩ (yellow, purple, red, gold)
3 10kΩ (brown, black, orange, gold)

Power-on reset is provided via the 1µF capacitor on pin 1. In addition, the microcontroller can be reset by pulling the Reset line at pin 4 of the header low. This "low" is inverted by PNP transistor Q5 to provide the required high-going reset signal to pin 1 of the microcontroller.

Note that Q5 is normally held off by the 10kΩ resistor connected between its base and the +5V rail.

NPN transistors Q6 & Q7 are used as simple switches to provide an active low, open-collector output. They work like this: normally, pin 9 of IC1 is high and so Q6 is on and Q7 is off. Subsequently, at the end of the timing period, pin 9 goes low and so transistor Q6 turns off.

As a result, Q7's base is pulled high via a 4.7kΩ resistor and so Q7 turns on and pulls pin 6 of the header socket (OUT) to ground.

Note that Q7 is protected by zener diode ZD1 which breaks down and conducts if the voltage across Q5 exceeds 33V. In addition, ZD1 immediately conducts and protects Q7 if any negative voltages are applied to its collector – eg, the back EMF generated when relay coils switch off.

Why use two transistors?

At first glance you may wonder why two transistors are used to switch the output. Why not eliminate one of the transistors and simply use an active

Programmable Down Timer (K148T0): How It Works

The microcontroller supplied with the kit is marked "T0" and contains the program for a 4-Digit Programmable Down Timer with output and reset. The timing is in seconds, with a maximum programmable time of 10,000 seconds (0000) – equivalent to 2 hours, 46 minutes and 40 seconds.

The unit has four operating modes that control the output function when the timer reaches zero. We'll look at these shortly.

Programming

The two buttons marked Start and Stop are used to program the starting time and select the operating mode.

When power in initially applied, the display shows 0000. If you press the Start button at this point, the timer will start to count down from 10,000s so do not do that. If you did, reconnect the power and start again at 0000.

Programming the start value is done one digit at a time, starting with the leftmost digit. The decimal points are used to indicate which digit is being set at any given time. This is always the digit immediately to the left of the decimal point displayed.

Here's the step-by-step programming procedure:

(1) Press the Stop button once to enter programming mode. The leftmost decimal point will come and the display will show 0.000.

(2) Use the Start button to set the value required in the leftmost digit; ie, from 0-9. When you have programmed in this value (eg, 5), press the Stop button again to move the decimal point to the right (50.00).

(3) Use the Start button to program in the value for next digit (eg, 4), then press Stop again to move to the third digit (540.0)

(4) Repeat the above procedure to program the last two digits

(5) Press Stop after setting the units digit. The display will now switch functions to allow the operating mode to be set. Initially, the current operating mode (probably 1) will be displayed.

(6) Use the Start button to set which of the four operating modes you want (see below for a description of each), then press the Stop button. The display will blank momentarily to indicate that programming mode has ended and then indicate the programmed start value (ie, the value it has been set to count down from).

The timer is now programmed and ready to go.

Starting the timer: to start the timer, either press the Start button or pull the Start input to ground. The timer will then start counting down towards zero. Note: the Stop button has no affect while the timer is counting down.

Stopping the timer: the only way to stop the timer once it has started counting is via the Reset input; ie short the Reset pin to ground. The timer will then reset to its programmed value (the operating mode is not affected).

Note that if the timer loses power, it will restart in Mode 1 with a preset value of 0000 (10,000 seconds).

Operating modes

There are four operating modes that control the timer and the output (see below). Note that the Reset input does not affect the operating mode.

Mode 1 – Timer Stop, Output Hold (default): this is the default mode at power up. The timer stops when it reaches zero and the Output pin goes low and stays low. You then have to press Reset (ie, short the Reset pin to ground) to continue.

Mode 2 – Timer Overrun, Output Hold: this is the same as Mode 1 except that the timer continues counting down past zero, wraps around to 9999 and starts counting down from there. The Output pin goes low at a count of zero and stays low. Short the Reset pin to ground to return to the preset timer value.

Mode 3 – Auto Reset, Pulse Output: when the timer reaches zero, the Output pulses low for 20ms and the timer resets itself to the programmed value and stays there. You can count down again from the preset value by pressing Start.

Mode 4 – Timer Overrun, Pulse Output: same as Mode 2 except that the output pulses low for 20ms instead of staying low. Counting wraps to 9999 and starts counting down. Short the Reset pin to ground to return to the preset timer value.

Once the counter has stopped counting down, you can reset the timer value by pressing Stop and then programming in the time and the mode as described previously.

The hours and minutes Programmable Down Timers (kits K148T4 & K148T5) work in a similar fashion.

high signal from IC1 to switch the output transistor? It's all to do with what happens on reset.

What happens on reset is that the microcontroller's I/O ports are configured as inputs (via internal hardware) and "float" high. If the I/O pin was connected directly to the output transistor, then the output would be "on" during reset. It would then switch "off" after reset as the onboard firmware took over.

In other words, the output would momentarily "flick" on during the reset period – which is not what we want. Using the extra transistor means that we can use a low signal to turn the output on and a high to turn it off, which eliminates any glitches during reset.

The 4.7kΩ resistor on pin 9 of IC1 ensures a "solid" high level signal to

Simple Photographic Timer (K148T1)

This version of the kit (K148T1) is a simple countdown timer with six preset times: 60, 90, 120, 300, 600 and 900 seconds.

At power up, the default count time is 60s but pressing the Stop button cycles through the other preset time delays.

At the end of the count, the output goes low for 2s and the timer then resets back to the selected time period, ready to start again.

Auto-Ranging Frequency Meter (K148T3)

The 40kHz Auto-Ranging Frequency Meter (K148T3) measures frequency up to 40kHz over two ranges: 0-10kHz and 10-40kHz. Range-switching is automatic and the gating period is 1s on the low range and 0.1s on the high range.

Basically, a frequency cycle is measured by a high-to-low transition at the Start input of the timer module. For the Atmel microcontroller, a high is defined as 1.2-5V DC while a low is 0-0.9V DC (ie, TTL signal levels).

The display reading is always in kHz, with the decimal point position indicating the range. The maximum reading is 9.999kHz on the low range (1Hz resolution) and 99.99kHz on the high range (10Hz resolution). Note, however, that the maximum frequency that the unit can measure is 40kHz.

The open collector output is "active" when the counter switches to the high range. This output could be used to drive a LED or some other device to indicate that the input frequency is greater than 9.999kHz.

As it stands, the circuit works fine with 5V logic circuits. However, a preamplifier stage (to condition the input signal) will be necessary if you want to measure the frequency of low-level signals; eg, audio signals.

A simple broadband preamplifier that will do the job is shown on the Kitsrus website. It uses just two transistors and a handful of other parts and can easily be built on a piece of stripboard.

turn the output off (ie, Q6 on and Q7 off).

Power supply

The circuit is powered from an 8-9V DC supply (eg, a plugpack). This is fed to REG1, a 78L05 3-terminal regulator, to derive a +5V supply rail for the remainder of the circuit. Diode D1 provides reverse polarity protection, while supply line filtering is provided by 10µF and 100nF capacitors.

Timing accuracy

The crystals supplied have a tolerance of ±30ppm, so the actual crystal frequency could vary by as much as 360Hz either side of 12MHz – an uncertainty of ±003%. Over a 1-hour timing period, this amounts to a maximum error of ±0.108 seconds.

However, prototype testing showed that the actual error was more like -1.25 seconds/hour (-0.035%). The factors affecting this include not only the design of the oscillator circuit itself (in this case, a Pierce configuration) but also such variables as temperature and component layout.

It all boils down to this: the assembled unit should be accurate to within ±0.05%, or 1.8 seconds/hour. If possible, do an accurate test over 24 hours (1440 minutes) using the telephone company's time service to determine the number of seconds gained or lost per hour. For critical applications, you can vary the two load capacitors on the crystal to reduce timing errors (say between 10pF and 56pF).

Construction

This is the easy part, although you do need to have good soldering skills. That's because the PC board pads are quite small and are fairly close to each other. It is recommended that you use a fine-tipped soldering iron and thin solder when installing the parts. Also, don't use too much solder, as this increases the risk of solder bridges between adjacent pads.

Fig.2 shows the assembly details. Begin by installing the resistors (see the parts list for the colour codes), then install the diodes (D1 & ZD1). Make sure that the cathode (striped) end of each diode matches the striped end on the PC board overlay.

Crystal X1 goes in next and this can be installed either way around. Note that it is located between the IC socket pin rows. Make sure that it is sitting flush against the PC board surface before soldering it into place.

Now comes the IC socket. It consists of two 10-pin machine socket strips. This technique was necessary because the crystal would not fit inside a normal IC socket. Solder just one pin first, then check that the strip is sitting correctly in the holes before soldering the remaining pins (the socket strip must be vertical and flush down on the PC board).

The capacitors can now be installed, taking care to ensure that the two electrolytics (10µF and 1µF) are correctly oriented. That's easy – just align each capacitor's positive lead with the "+" sign on the component overlay diagram.

Next, install the transistors and REG1. Don't get these confused – transistors Q1-Q5 are BC557s (PNP types), while transistors Q6 and Q7 are BC547s (NPN types). REG1 is the 78L05 3-terminal regulator. The outline on the PC board shows its orientation (ditto for the transistors).

Push the transistors down as far as possible (without applying excessive force) before soldering their leads. Note that they should all sit lower than the top surface of the display when it is installed – you can temporarily insert the display to check this. This will help later on if you decide to mount the PC board in a case.

Double check that you don't have any solder bridges across the transistor pins, as they are close together.

Finally, install the two pushbutton switches, the 10-way 90° pin header strip (for the inputs and output) and the LED display. Take care with the display orientation – the decimal

WHERE TO BUY A KIT

Kits and microcontroller ICs for the "K148 Start/Stop Timer" are available from two companies:

(1) Ozitronics – phone (03) 9434 3806 (**www.ozitronics.com**);
(2) Oatley Electronics – phone (02) 9584 3563 (**www.oatleyelectronics.com**).

If you have any technical problems or questions, or if you want slightly altered firmware for a particular application, you can contact the kit developer at **frank@ozitronics.com**. Information on other kits in the range (eg, the Atmel 89Cxxx Programmer, K123) is available from **www.kitsrus.com**

Note: copyright of the PC board and the source code for the Atmel microcontroller is retained by the author.

points go towards the microcontroller.

Note that two 90° pin header strips are supplied in the kit – a male header and a female header. It's up to you as to which one you mount on the PC board for the external connections.

Testing

Do not install the microcontroller into its IC socket yet – that step comes later, after you have made a few basic voltage checks.

To test the unit, apply power and, using your multimeter, measure the voltage between pins 20 & 10 of the IC socket. You should get a reading of 5V (within a few millivolts).

If this checks out, switch off and carefully insert the microcontroller into its socket (noting its polarity). Check that all the IC's leads go into the socket and that none are bent outwards or under the body of the IC.

Finally, reapply power and check that the display lights. The digits displayed will depend on the specific microcontroller used. In most cases, it will show all zeros.

Troubleshooting

Poor soldering ("dry joints") is the most common reason for the circuit not working. If you strike problems, the first thing to do is to check all soldered joints carefully under a good light and resolder any that look suspicious. Make sure that there are no solder bridges or "splashes" shorting out adjacent points on the PC board.

You should also carefully check that the parts are in their correct positions and that all parts are correctly oriented. Check that none of the pins have been bent under the body of the IC.

What about the transistors? Q6 and Q7 are NPN types (BC547) while all the others are PNP types (BC557). Did you get them mixed up? Did you confuse the 78L05 regulator with one of the transistors?

Finally, check that REG1's output is at 5V. If there is no voltage at the output of this regulator, check the voltage at its input – it should be at least 8V DC. Anything less and the regulator will not operate correctly.

If there's no voltage here, then it's possible that D1 has been installed the wrong way around – either that or you've inadvertently reversed the supply leads. SC

Protect Your Valuable Issues

★ Each binder holds up to 12 issues
★ Heavy board covers with 2-tone green vinyl covering
★ SILICON CHIP logo printed in gold-coloured lettering on spine & cover

AVAILABLE IN AUSTRALIA ONLY

Just fill in & mail the handy order form below; or fax (02) 9979 6503; or ring (02) 9979 5644 & quote your credit card number.

Yes! Please send me _____ SILICON CHIP binder(s) at $A12.95 each plus $5.50 p&p. Australia only – not available elsewhere.

Enclosed is my cheque/money order for $_____ or please debit my

❑ Bankcard ❑ Visa Card ❑ MasterCard

Card No. | | | | | | | | | | | | | | | | |

Signature_____ Card expiry date_____/_____

Name _____

Street _____

Suburb/town _____ Postcode_____

SILICON CHIP PUBLICATIONS
PO Box 139, Collaroy Beach, NSW 2097, Australia.
Phone (02) 9979 5644 Fax: (02) 9979 6503.

VINTAGE RADIO

By RODNEY CHAMPNESS, VK3UG

The AWA 532MF 32V Table Receiver

In the January 2001 issue, we described the Operatic Mignon 32V receiver. This month, we cover another 32V set, AWA's high performing 532MF, also known as the Hotpoint-Bandmaster V55DD. This used a line-up of high-gain valves to give it very good performance on broadcast and shortwave bands.

The 532MF was produced from around 1950-1955 and is a 5-valve receiver. The valves used are 6BA6 RF stage, 6BE6 converter, 6BA6 455kHz IF stage, 6AV6 detector, AGC and 1st audio stage, followed by a 6AQ5 pentode audio output. It covers the normal AM broadcast band and the popular international 6-18MHz shortwave band. Due to the use of these high gain valves the performance is extremely good – as you would expect.

The set is virtually a high performing 240VAC receiver that has been designed to work off 32V DC, drawing a total current of 1.3A (see Fig.1). The heaters are wired in series to operate directly off 32V. As the 6AQ5 draws 450mA of heater current and the other valves only draw 300mA, the equalising resistor R21 ensures that the extra 150mA drawn by the 6AQ5 is shunted away from the other valves. The 200V DC of HT (high tension) is provided by a synchronous vibrator power pack running directly from the 32V.

The voltage supplied by 32V lighting plants varies considerably, so a series resistor (R23, 5Ω) is switched in series with the supply to drop the voltage applied to the set by around 6.5V when the batteries are on charge.

With 16 fully-charged cells the nominal voltage supplied is 33.6V (2.1V per cell). When the batteries are flat the voltage drops to 28.8V and when fully charged and gassing the voltage rises to 40V, hence the dropping resistor R23. Some users of 32V lighting plants put an additional cell or two in series with the battery bank, which makes the supply either 34V or 36V.

Under these circumstances, the battery voltage could easily rise above 40V on charge – way in excess of 32V. This was done to overcome the voltage drop on the power cables from the batteries to wherever the electricity was being used. But it gave some of the appliances (including radios) a bit of a hard time. Globes burnt really brightly!

In the May 2000 article, I spoke of making obsolete 6V and 32V sets useful when AC power became available in farming communities. One of the sets I did convert was a 532MF and it performed well. A secondhand shop asked me if I'd fix up a set that they had got in that continually blew fuses. It was an unmodified 532MF and they were trying to get it to work on 240V AC! I said that I would be interested in doing a swap as I had a converted set that worked well and I really wanted an unmodified receiver.

We did a deal – I just hoped that the

As was the case with all Australian sets of that era, the AWA 532F has all the major broadcast station markings for every state.

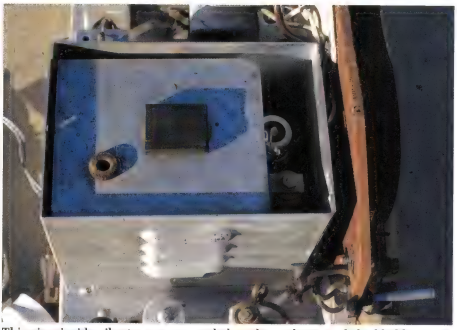

This view inside vibrator power supply box shows the second shielded box. This two-box construction was used to suppress vibrator hash and noise.

damage to the set was only to the fuse. Fortunately the fuse was the only damage done – but if the fuse had been larger than the 3A fitted, the set could easily have been a write-off.

Restoring the 532MF

Removing the set from the cabinet first involves pulling off of the four push-on knobs and laying them aside with the celluloid sheets that have the control functions marked on them (that is, if they are still with the set; mine weren't). You then remove the four screws from the back, withdraw the four bolts under the cabinet and slide the chassis out.

That done, the set can be turned upside down as it will largely rest on the vibrator power supply box. The set is full of black "moulded mud" paper capacitors. If they have splits anywhere on them it is advisable to replace them. The audio couplers (C28, C33) and the AGC bypasses (C7, C9, C18) should be replaced as a mat-

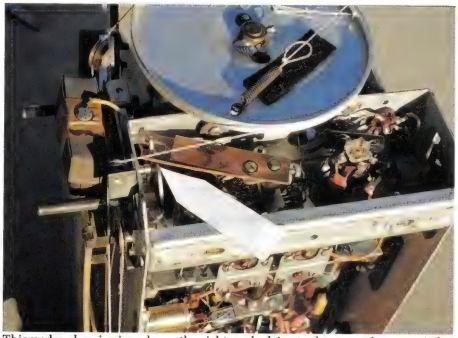

This under chassis view shows the right angle drive to the wave change switch (the large white arrow points to the mechanism).

Looking for an old valve?
or a new valve?

BUYING - SELLING - TRADING
Australasia's biggest selection
Also valve audio & guitar amp. books
SSAE DL size for CATALOGUE

ELECTRONIC VALVE & TUBE COMPANY

PO Box 487 Drysdale, Victoria 3222.
Tel: (03) 5257 2297; Fax: (03) 5257 1773
Mob: 0417 143 167;
Email: evatco@mira.net
Premises at: 76 Bluff Road,
St Leonards, Vic 3223
www.evatco.com.au

ELAN Audio
The Leading Australian Manufacturer of Professional Broadcast Audio Equipment
Featured Product of the Month
PC-BAL
PCI Format Balancing Board Interface PC Sound Cards to Professional Systems

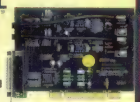

Not only do we make the best range of Specialised Broadcast "On-Air" Mixers in Australia. . .
We also make a range of General Audio Products for use by Radio Broadcasters, Recording Studios, Institutions etc.
And we sell AKG and Denon Professional Audio Products
For Technical Details and Professional Pricing Contact
Elan Audio 2 Steel Crt
South Guildford WA 6055
Phone 08 9277 3500
Fax 08 9478 2266
email sales@elan.com.au
WWW elan.com.au

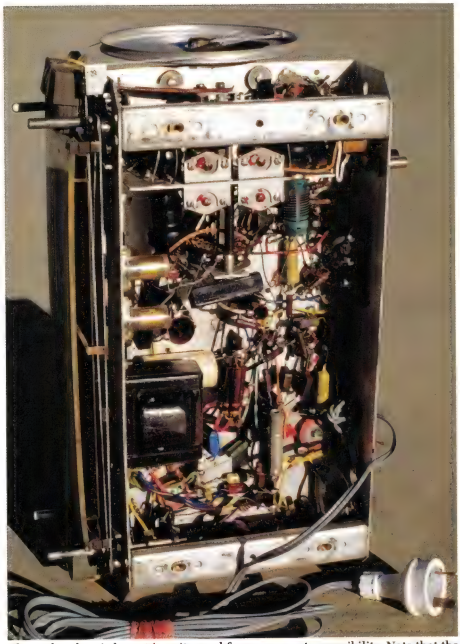

The under chassis layout is quite good for component accessibility. Note that the original black "moulded mud" paper capacitors have been replaced with dipped polyester capacitors.

ter of course, by polyester or greencap capacitors.

The resistors can be checked to be sure that they are within tolerance but I've found they're rarely at fault.

Cleaning up

The set was relatively clean and only required a dust out and a light scrub with a Nylon scouring pad, dampened in kerosene, to get it in quite good nick. The cabinet got the usual scrub in soapy water in the laundry trough. It is always necessary to be careful not to wet the speaker cloth, unless it is being taken out to give it a really good clean.

The dial lamps were OK and were not showing darkening in the envelope, so they were left alone.

Even the dial cord was in quite reasonable condition. The dial drive system is not the easiest to re-string and requires nearly two metres of cord to do the job. It is desirable to remove the dial pointer and the dial scale before endeavouring to re-string the mechanism. It is just so much easier to do once the dial scale has been removed.

I replaced the power cord and the power plug. I don't leave 3-pin plugs on any sets that don't work on 240VAC mains. Instead, I fitted a 2-pin polarised plug so that the set can not be accidentally plugged into the mains (as the secondhand dealer had done earlier).

I coupled the set to my 32V DC power supply to see how it performed. I made sure that the chassis was attached to the negative terminal of the supply. Many 32V sets were connected up with positive to the chassis – and they don't work with a negative HT voltage! Surprisingly the electrolytic capacitors didn't seem to suffer provided the sets were not left with reversed voltage on them for more than 30 seconds or so. Usually customers who bought a 32V set were told to connect it to power and if it didn't operate within around a minute, to turn it off and reverse the connections to the power plug! The set would then operate.

Mine performed quite satisfactorily and the valves were all in good order. However, the HT voltage was down a bit so a check of the power supply was called for.

The circuit does not show it but the set has provision to use it with a 32V turntable so that records could be played through it. I wonder how many sets with this provision were actually used with a record player?

Vibrator power supply

Vibrator power supplies are not as easy to service as AC mains supplies. For a start, the supply is shielded. In fact, it consists of a shielded box with another shielded box inside it, as shown in one of the photographs. The shielding is indicated on the circuit diagram by the dashed lines around the vibrator portion of the circuit.

To remove the supply for service, it is necessary to first unsolder the black (earth), yellow (+32V) and red (HT) wires which come out of the supply (noting which tagstrip points they come from). You then remove the top cover by removing the self-tapping screw at the back of the supply and lifting it off. Inside you will see the second box, which can now be lifted out.

The outer box sits on several rubber grommets and the inner box has foam rubber glued to its sides, bottom and top, as resilient mounts. The rubber mounting is to make sure that the mechanical vibration of the vibrator

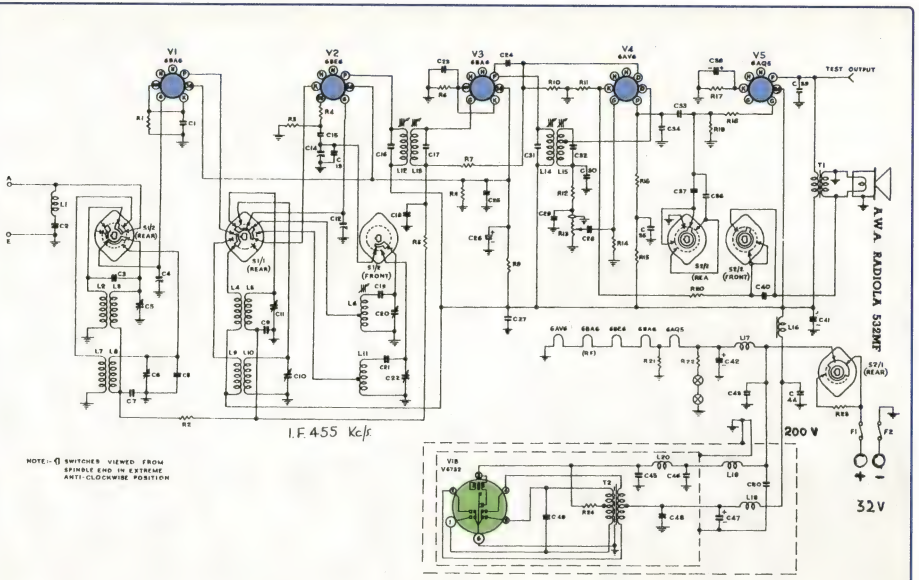

Fig.1: the AWA 532F was intended to be run from 32V lighting systems on farms. All the valve filaments are run in series across the 32V supply and an equalising resistor (R21) takes care of the fact that the 6AQ5 filament current is higher than for the other valves.

This is the rear view of the chassis. The large metal box is the vibrator power supply. Note the 6AQ5 valve located at the end of the chassis. This means that the set cannot be sat on its end unless a block is put under the side of the power supply to protect the valve.

is completely muffled. The rubber mounting is also intended to make sure that the supply is only earthed at one spot, to reduce the likelihood of the receiver picking up interference from the supply.

Without this elaborate shielding and the accompanying filtering, the interference would be so bad that only the strongest stations would be audible above the obliterating hash. Sets of this type are intended to operate in remote rural areas, so the interference generated by the supply must be completely suppressed by shielding and filtering, if possible.

With the inner box removed, it is then necessary to remove the top and bottom plates which then exposes all of the works in the supply. It is desirable to replace all the paper capacitors and the electrolytic capacitor in the supply. They may not necessarily be faulty but they are hard to get at and if one was faulty, you wouldn't know it until you had completely reassembled the supply into the receiver and tried it. C48, the buffer capacitor, is important and if it is faulty, the vibrator will quickly be ruined.

The vibrator (V6732) is a 32V synchronous unit. The 32V rating is purely the rating of the reed drive coil. For example, a 6V vibrator with the same pin-outs can be used with a 32V set, providing the drive to the reed coil is reduced to 6V.

With the supply disassembled, I decided to inspect the vibrator to see if all was well with it. I unplugged it from its socket and the lug on the side of the vibrator near the plug was unsoldered. Then the circlip holding the unit inside its case was removed and the vibrator withdrawn from the case.

I plugged the vibrator back into its socket, extended the three leads to the set and tried the set out. The interference was terrible of course, but I was looking at the vibrator to see how it was performing. It seemed to be OK with minimal sparking at the contacts. I decided to run a small points file through the points to clean them, being careful not to bend anything. I couldn't increase the HT voltage by any significant amount so I left things well alone and reassembled the vibrator. New vibrators are expensive if you can get them and the voltage wasn't down significantly.

I reversed the procedure for dismantling the supply and threaded the three wires back through the hole at the bottom of the larger shielded box. The leads were re-attached and the set tried out again. There was still some vibrator interference in the set and being a purist, I wanted to eliminate it. However, I've not been able to completely cure this small problem.

Alignment

The set is easy to align, with all adjustments quite accessible. The IF is 455kHz and the two bands are broadcast and shortwave (6-18MHz). There are no adjustments for the low frequency end of the dial for the RF or antenna coils. This makes alignment simple but does mean that the performance may be lacking on the low frequency end of each band. However, with such high sensitivity it does not appear to matter. I have tried adding small ferrite slugs in the antenna and RF coils and a slight improvement in performance is observed – whether it is worth the trouble to modify the set in this regard is questionable though.

The alignment procedure is quite conventional and has been covered in other articles. Basically, you adjust the IF transformers for maximum reading (on 455kHz), as measured with a digital multimeter (DMM) across R13. Adjust the oscillator coil slugs near the low end of each band and the oscillator trimmer near the high frequency end of each band. The RF and antenna coils are only adjusted for peak performance (as shown on the DMM) towards the high frequency end of each band.

There is one interesting little quirk with the physical design of this set. The wave-change switch has a right angle drive from the front panel (see accompanying photograph). I'm not sure why AWA did this but it does work quite effectively.

Aesthetics

The AWA 532F receiver is quite attractive as a large mantel radio or a medium-sized table set. The cabinets came in at least two colours: cream and brown. The control knobs on each end of the set had a celluloid sheet with two holes in each which slipped over each control spindle. The control functions are printed on the celluloid in white. Mine are missing. I painted the control functions on the front of the set many years ago, but they do look unprofessional.

I am thinking of typing up some labels on the computer and then copying them onto a transparent sheet via

Photo Gallery: Stromberg Carlson D70 & 1935 Essanay

Manufactured by Stromberg Carlson in 1939, the D70 is an example of a universal set designed to run from either AC or DC mains supplies. Because one side of the mains was connected directly to the chassis, extreme caution had to be exercised when servicing these sets. Today, they are best operated via an isolation transformer. The set used the following valves, with their heaters wired in series: EK2G frequency changer, CF2 IF amplifier, CBC1 1st audio/detector/AVC amplifier, CL3 output, CY2 rectifier and a C1 Barretter. (Photos and information courtesy Historical Radio Society Of Australia).

The Essanay company was established in South Melbourne in the 1920s, initially as a manufacturer of radio components. The company subsequently expanded into the design and manufacture of domestic radios in the mid-1930s but apparently closed down prior to WW2. The receiver shown here is a "Tombstone" model from 1935 and sold at the time for 17 guineas (ie, £17-17-0). It covered both medium and shortwave bands and used (mainly) the following Philips "P" base series of valves: AKZ frequency changer, AF3 IF amplifier, ABC1 1st audio/detector/AVC amplifier, AL3 output and a 1561 or 80 rectifier.

a photocopier. Whether the sheet will be stiff enough I've yet to find out. The labelling will be the wrong colour, but will look better than my hand-painted labels of several years ago.

Before reassembling the receiver, I gave the cabinet a good clean with auto cut and polish compound. It really brings up Bakelite cabinets and gets rid of minor scratches.

A less fortunate 532MF

Quite recently, I saw another 532MF that had been converted to AC operation. I was rather dismayed at how it had been done. The dial drive system had been incorrectly strung, with the pointer going the opposite way to convention. Other faults included an intermittent IF valve; twin-core power cord joined just out the back of the set (dangerous); on-off switch not wired in and the cabinet was missing.

The alignment was out as well and one IF transformer appeared to be faulty. I gave it a very quick (aural) alignment (I was just visiting and had no tools) and got quite an improvement out of it. However, it was dirty and generally it was a sad set. What a shame. With a little tender loving care this could once again be a first class operational set. I felt like saying "Can I have it, please?", just to give it a good home.

Summary

The AWA 532MF radio is a straightforward 5-valve dual-wave design of quite high sensitivity. They are relatively easy to restore, with the vibrator power supply being the most awkward part to refurbish. From my experience, they require more maintenance than the Operatic equivalent. They are one of the more pleasing Bakelite sets to look at and well worthwhile having in a collection even if no 32V power source is available to run it. **SC**

Silicon Chip Binders

REAL VALUE AT $12.95 PLUS P&P

- ★ Heavy board covers with mottled dark green vinyl covering
- ★ Each binder holds up to 12 issues
- ★ SILICON CHIP logo printed in gold-coloured lettering on spine & cover

Price: $A12.95 plus $A5.50 p&p each (Australia only; not available elsewhere). Buy five and get them postage free.

Just fill in & mail the handy order form in this issue; or fax (02) 9979 6503; or ring (02) 9979 5644 & quote your credit card number.

ASK SILICON CHIP

Got a technical problem? Can't understand a piece of jargon or some technical principle? Drop us a line and we'll answer your question. Write to: Ask Silicon Chip, PO Box 139, Collaroy Beach, NSW 2097; or send an email to silchip@siliconchip.com.au

High energy ignition for a Citroen 2CV

I built the High Energy Ignition system from the June 1998 issue and successfully installed it in my Citroen 2CV (2-cylinder 600cc air-cooled engine) using its original contact points for triggering. It worked first time and worked well for about two weeks, starting first time, every time and running very well with noticeably better acceleration.

Then I noticed that its performance degraded rapidly over a period of a week or so. It would tend to stall at traffic lights and would be difficult to start, with the engine missing a beat. As I use the car daily, I switched the car circuit back to its normal direct point switching.

Would you know what is wrong with the circuit? Is the output transistor at fault? (M. A., St Marys, SA).

● We suspect that the problem is that the points are oiling up from fumes in the engine. Periodic cleaning of the points will help but you may need to increase the points wetting current by using a second 5W resistor in parallel with the original.

Li'L Snooper camera switcher

I am interested in building your Li'L Snooper camera switcher from the June 2001 issue. Will this circuit be suitable for colour cameras; one is CCD, the other is CMOS? If not, can you recommend any mods to make it suitable? (C. L., via email).

● The Snooper will work with any camera that puts out a 1V composite video signal.

Volume control for amplifier module

I recently bought a 50W stereo amplifier module kit from Altronics. It was published in the February 1995 issue of SILICON CHIP. I have reviewed the design and the only thing that I could think of putting in the circuit was a volume control. How do I do that? (T. H., via email).

● The answer is quite simple, use a 10kΩ dual gang logarithmic pot. The pot wiper goes to the amplifier module in each channel.

Raucous alarm not loud enough

I have just built the "Raucous Alarm" from the January 2002 issue and it works just fine. Is there a simple, easy way to increase the output to say 110dB or thereabouts, as I would like to use it in a large hall, full of noisy people? (A. W., Launceston, Tas).

● The answer is to use the most efficient piezoelectric tweeter you can buy and use a 15V supply. We suggest the CTS KSN 1177A from Altronics (Cat C-6170). It has an SPL rating of 99dB at 2.83V/1m.

Noisy transformer in battery charger

I recently purchased the Multi-Purpose Fast Battery Charger MkII from Jaycar Electronics (featured in the June & July 2001 issues) and I am getting serious buzz or hum from the inductor. The severity of noise depends on the battery being charged. A single NiMH cell makes more noise than a pack of 4 or 8. I wound the inductor with even pressure but the windings are not settling. Is this cause for concern? Would dipping the inductor in epoxy or "Liquid Tape" assist in the reduction of high frequency noise? Or do I need to wind the inductor again?

I was curious about the gap in the ferrite core and do not understand the concept behind this, especially since the centre core (E core) has an air gap. Does this need a spacer as well?

Also, when the batteries are discharged I am surprised to find that a (cycled) 4.8V 1500mAh NiMH pack

Checking Dr Video for damage

I recently assembled a Dr Video kit, as published in the April 2001 issue. Upon running power through it I found I had made a couple of errors. Could you please advise me whether this may have damaged some of the circuitry?

My first problem was that I accidentally bridged solder across two of the terminals on IC2. Looking at the PC board overlay, the bridge occurred between the lower 5th terminal and the solder imprint running to the terminal on the opposite side.

The other problem was that I inserted three of the chips upside down. This was because I determined their direction by following the lettering as in the circuit diagram, as opposed to paying attention to the direction of the cutout markers. Having discovered and rectified these faults, the unit is working after a fashion.

There is a television picture when the unit is on and no picture when the power is turned off. The problem is that white horizontal lines flow down the picture and make it unwatchable. This occurs both when the sharpen button is depressed and when it is not. Is this horizontal jitter that may be rectified as per your instructions or am I likely to have some other problems? (D. K., via email).

● Have you replaced the chips which were inserted wrongly and have you checked the voltages, particularly the -5V rail. It is highly likely that IC4 was damaged and we would be surprised if IC1 and IC7 were not also damaged. IC2 is unlikely to have been damaged.

lasts only 2-3 minutes. With the constant discharge of 2A (Refresh Rate) shouldn't they last longer? Around 30-45 minutes? (B. C., via email).

● Noise from the transformer is not a cause for concern, apart from the irritation, of course! Usually it is caused by the ends of the core pieces vibrating against each other and the surrounding former (magneto-striction) or is caused by loose turns in the windings. The solution is often to glue the two halves together or, as you suggest, to impregnate the core with varnish. You could also dip it in thin epoxy but make sure it is thin, as heat must be able to escape from the core and windings.

The gap between the core's centre legs is created to prevent the core from saturating at high power levels. When the core of an inductor saturates, it acts more like a resistor than an inductor, with current flow through it limited only by the resistance of the windings. When that happens, power dissipation is usually very high and efficiency drops.

The size of the gap is very important and is calculated according to core characteristics and peak current – be sure to follow the construction details exactly.

In our opinion, the Multipurpose Fast Charger Mk II is not suitable for charging small cells, and in particular NiMH-chemistry types. Manufacturers recommend that small NiMH cells (AA, AAA, etc) should NOT be fast-charged at greater than 1C, which equates to 1.5A for your particular application.

Having said that, you will probably be able to successfully charge a NiCd pack this small using the temperature sensing option, but make sure that the thermistor is in close contact with the pack (or one of the cells).

The ideal answer though is the SuperCharger design featured elsewhere in this issue.

Full range equaliser

I was hoping you may be of assistance with a project featured in the July 1996 issue, namely a Parametric Equaliser. What modifications would need to be made to make each band full range instead of the three separate bands (low, mid & high)? (A. H., via email).

Interference problem with volume control

I have built the Remote Volume Control featured in the June 2002 issue of SILICON CHIP but it has a bug. At switch-on, (after initial checks) the ACK LED is permanently on – flashing only when a remote button is pushed. Also when Mute is pushed, the pot doesn't rotate the full distance, regardless of where VR1 is positioned.

I've replaced all the transistors but since then the mute hardly works at all. I did notice that when placing a finger near or on the terminals of the 100µF capacitor on terminal 3 of IRD1, the ACK LED seemed to behave properly. Replacing the capacitor did not rectify the problem. I suspect IRD1 but would like your thoughts first.

I only tacked IRD1 in by the tips of the leads (for testing purposes) so I doubt that it's heat damage. Also IC1 and IC2 are in sockets, inserted with a proper insertion tool to prevent static damage, so they should be OK. Could IRD1 be static-damaged or crook from day one? (J. I., via email).

● It sounds like IRD1 is playing up. It probably is not faulty but is picking up electromagnetic interference or even infrared interference, causing it to receive and deliver a signal all the time.

To solve this, try using a larger capacitor (than the 100µF) across the supply to IRD1 – 470µF may be sufficient. Also IRD1 may need shielding. Try covering it with a metal shield, using aluminium or tinplate (cut from tin can). The metal shield needs to be earthed to the 0V supply of the IRD1. Also a hole is required for the lens.

● Although we have not tested this idea, the circuit could be made adjustable over the entire audio spectrum if the capacitor and resistor values are used for the treble section but with the frequency adjust potentiometer (VR9a and VR9b) changed from 25kΩ to 200kΩ. The change in frequency with respect to pot movement would be rather coarse, however.

Video enhancer adds noise

I have purchased Jaycar's AR-1820 Video Enhancer. I realise it's a simple device but I'm wondering if you have any further user tips for this item.

For example, I notice that when applying the "Sharpen" function to a DVD dub, ghosting occurs. I find that DVD dubs are best without this function enabled. Is this correct? (R. E., via email).

● Use of the sharpen function will tend to emphasise any noise in the video signal so ghosting is also a possibility. With a DVD the signal should optimum anyway, so don't use the sharpen function.

Needs 12AX7 preamplifier kit

I've been searching in vain for a simple kit to plug my bass guitar into.

Calibrating the Li'l Powerhouse supply

I've built the Li'l Powerhouse kit from the June & July 2000 issues and I am having some problems with it.

First, the maximum output voltage is only 38V not 40V. I cannot calibrate the panel meter to the voltage; ie, I calibrate it to 0V but when I increase the voltage, the panel meter doesn't match what the DMM reports. I'd be grateful for any tips. (F. W., via email).

● The answers to your questions are as follows:

(1) The lower output voltage is probably due to either a low mains supply or a transformer that has a little less output than the unit we used in our prototype.

(2) You don't mention the actual difference between your multimeter and the panel meter. A small difference is OK, as the panel meter (and perhaps your multimeter) are not precision devices.

However, if the difference is large, then it is almost certainly due to either: (a) incorrect full-scale calibration of the panel meter; or (b) a problem with the +5V or -5V rails.

When performing the voltage calibration, be sure to follow these steps exactly (there should be no load connected to the output terminals):

(1) Disconnect the wire from the pole of S4b. This ensures that the non-inverting input of IC4 (pin 3) is at 0V. Adjust VR5 for a reading of 000 on the panel meter.

(2) Reconnect the wire to the pole of S4b. Set the meter switch (S3) to the "Volts" position and connect your DMM to the output terminals. Set the load switch (S2) on and using the "Voltage Adjust" pot (VR1), adjust the output voltage to get 37.00V on your DMM.

(3) Now connect your DMM between pin 6 of IC4 (marked TP1 on Fig.6 of the overlay diagram) and 0V (marked GND) and set it to read millivolts. Adjust VR4 for a reading of 370mV on your DMM.

(4) The panel meter should read 37.0V. If it does not, then adjust the trimpot built in to the panel meter (accessible through a small hole at the rear) to get the correct reading.

By the way, you should refer to Notes and Errata from the August 2001 issue for additional information about calibrating the current reading.

I currently run it into a 4-channel mixer, then to a 50W SILICON CHIP amplifier (February 1995). Anyway, the bass misses the "valve sound" and I was wondering if you have a kit, or know of a kit that is a basic mono preamp, with something like a single 12AX7? (B. D., via email).

● "Electronics Australia" described guitar amplifiers with a 12AX7 input in October 1962 and in June 1967. They are quite different. We can supply photocopies of the articles for $8.80 including postage.

Universal stereo preamp level control

I have purchased and built a Universal Stereo Preamplifier from Jaycar Electronics (SILICON CHIP, April 1994). I have built it as a phono configuration to connect to a computer sound card for recording LPs. The unit seems to work well, however I found that the output level is a little high causing a small amount but annoying distortion.

As I am new to electronics, I would like to know if it's possible to change the value of one or some of the components to reduce the output level or better still put in a potentiometer or similar. (S. A., via email).

● The output from the preamplifier can be attenuated using a logarithmic potentiometer. Connect the preamplifier output to one side of the potentiometer. The other side of the potentiometer connects to the ground while the wiper or centre connection connects to the PC's sound card input. The potentiometer should increase the level of signal when wound clockwise and decrease the level when wound anticlockwise. A 10kΩ value would be suitable.

If the pot works the other way around, with decreasing signal when turned clockwise, reverse the outside connections. A dual-ganged pot would be more suitable as it can adjust both left and right channels together.

Tape cassette record circuit

I was wondering if you have a circuit, PC board layout and construction method for a cassette tape record/playback device, with AC bias. I need to construct about 20 of these units for a 4-track tape loop machine I have built. I have the mechanics done and now need to put in the electronics.

Because I need so many circuits (5 heads, 4 tracks = 20 circuits), I did not want to try wrecking old cassettes, as it would get too messy to put it all together. Ideally, I would like a circuit which uses the same head for record and playback, so I can record and playback using any of the five heads. (M. B., via email).

● "Electronics Australia" described a stereo cassette deck in August & October 1974 which had AC bias. We can supply these articles for $8.80 each including postage.

Jammed slugs must be fixed

I have been given the task to assemble the MiniMitter kit featured in the April 2001 issue. I have completed the assembly of the kit, including changing the mike plug to an RCA type. On test, the output was very low and unstable. I have installed new batteries.

Being an amateur radio operator, I found this kit good to assemble but found the slugs jammed in the coil formers; once they were screwed in, that's were they stayed. What next? (F. M., Medlands Beach, NZ).

● The jammed slugs in the formers must be fixed as they are the means to aligning the transmitter to a particular frequency. If you need to purchase new slugs, use F29 types.

Use an aligning tool to adjust the slugs to prevent them cracking. Adjust both cores carefully to obtain the correct tuning in stereo for the particular station frequency you are receiving on.

What is a dummy battery?

Call me a dummy if you like but the Circuit Notebook item in the December 2001 has caused confusion. It was for measuring current of a DC-DC converter. Now I've used dummy loads

but what is exactly a dummy battery. Please explain in more detail please. (G. M., South Morang, Vic).

● The expression "dummy battery" is explained in the fourth paragraph of the article on this circuit. As it says, the dummy battery replaces all the cells in the device under test and a variable voltage supply provides the power for the device. In the simplest application, the dummy battery could be a 9V battery snap connector.

Sound meter wanted for PA installations

You may care to consider doing a project which is able to measure in a dynamic fashion the sound level in a PA installation. I help out at our local church with operating their PA system and with the varied number of people using the PA system, it can become awkward to ensure that the level of sound heard by the audience is constant.

In most fixed PA installations, unless the controller is located within the listening area, it can become tedious and inconvenient to have others relay messages to the controller on whether the volume levels are set correctly. Even if you can see the audience and the speaker, often the sound heard by the operator is different since he is a little remote from the audience.

What would be useful is a sound level meter which could be mounted in the control room with a microphone located in the listening area. The meter could be switchable between RMS and peak levels to determine the optimum volume level.

While there are a number of sound level units available from many electronics outlets, these are typically portable units which require the operator to be in the listening area and do not generally lend themselves to being run remotely. In any event, the displays are typically quite small.

What would be more useful is a jumbo size display comprising LEDs which could be mounted on a wall in the control room to allow easy viewing by the operator. (N. A., Lyneham, ACT).

● You may want to consider our Sound Level Meter Adaptor for DMMs published in the December 1996 issue. You could install several of these around the auditorium and then switch the DC output signals to a DMM with large display at the control desk. We can supply the December 1996 issue for $7.70 including postage.

Digital thermostat needed for a PC

I am currently studying electronics at school for my Tasmanian Certificate of Education. One of the assessment things I need to do is a project by the end of the year. I have been looking into building a digital thermostat to be placed inside the PC case. I would like this to control a fan so if the temperature exceeds a particular level, the fan switches on. I would also like it to run off the PC power supply. (C. A., Devonport, Tas).

● We published a thermostat fan control as part of a speaker protection circuit for the Ultra-LD amplifier, in the August 2000 issue. You could just build that part of the circuit. **SC**

Better reception from two antennas?

I have a 4X4 and travel to many places in the Outback. I like to listen to the car radio and have noticed that with an aerial mounted on the right rear quarter of the vehicle, the radio has a much better reception if the left front of the vehicle is aimed at the transmitter. This presents a problem because roads are not always correctly orientated.

Is it possible to use two antennas and couple them via matching stubs of coax or a resistor network? The plan is to use two equal antennas, vertical, on the mudguards, just forward of the windscreen to get a more circular reception pattern. Do you know of the correct way to couple antennas to work on both FM and AM? (B. W., Curtin, ACT).

● It is theoretically true that two antennas can be connected together with a suitable phasing system to improve reception – for example, phased TV antennas are often used in low signal areas. And for years, truckies have used twin CB antennas mounted on their mirrors, again connected via a phasing harness.

However, because of the differences in mounting positions and vehicle types, it is rather difficult to forecast the directional pattern you will achieve using two antennas. The best receiving antenna (as far as uniformity of direction is concerned) would be mounted right in the middle of the vehicle roof.

Notes & Errata

5A Motor Speed Controller, October 2002: the PC board wiring diagram on page 17 shows a 100nF capacitor next to diode D2. This should be 47nF, to agree with the circuit on page 17 and the parts list.

WARNING!

SILICON CHIP magazine regularly describes projects which employ a mains power supply or produce high voltage. All such projects should be considered dangerous or even lethal if not used safely. Readers are warned that high voltage wiring should be carried out according to the instructions in the articles. When working on these projects use extreme care to ensure that you do not accidentally come into contact with mains AC voltages or high voltage DC. If you are not confident about working with projects employing mains voltages or other high voltages, you are advised not to attempt work on them. Silicon Chip Publications Pty Ltd disclaims any liability for damages should anyone be killed or injured while working on a project or circuit described in any issue of SILICON CHIP magazine. Devices or circuits described in SILICON CHIP may be covered by patents. SILICON CHIP disclaims any liability for the infringement of such patents by the manufacturing or selling of any such equipment. SILICON CHIP also disclaims any liability for projects which are used in such a way as to infringe relevant government regulations and by-laws.

Advertisers are warned that they are responsible for the content of all advertisements and that they must conform to the Trade Practices Act 1974 or as subsequently amended and to any governmental regulations which are applicable.

Silicon Chip Back Issues

April 1989: Auxiliary Brake Light Flasher: What You Need to Know About Capacitors; 32-Band Graphic Equaliser, Pt.2.

May 1989: Build A Synthesised Tom-Tom; Biofeedback Monitor For Your PC; Simple Stub Filter For Suppressing TV Interference.

July 1989: Exhaust Gas Monitor; Experimental Mains Hum Sniffers; Compact Ultrasonic Car Alarm; The NSW 86 Class Electrics.

September 1989: 2-Chip Portable AM Stereo Radio Pt.1; High Or Low Fluid Level Detector; Studio Series 20-Band Stereo Equaliser, Pt.2.

October 1989: FM Radio Intercom For Motorbikes Pt.1; GaAsFet Preamplifier For Amateur TV; 2-Chip Portable AM Stereo Radio, Pt.2.

November 1989: Radfax Decoder For Your PC (Displays Fax, RTTY & Morse); FM Radio Intercom For Motorbikes, Pt.2; 2-Chip Portable AM Stereo Radio, Pt.3; Floppy Disk Drive Formats & Options.

January 1990: High Quality Sine/Square Oscillator; Service Tips For Your VCR; Phone Patch For Radio Amateurs; Active Antenna Kit; Designing UHF Transmitter Stages.

February 1990: A 16-Channel Mixing Desk; Build A High Quality Audio Oscillator; Pt.2; The Incredible Hot Canaries; Random Wire Antenna Tuner For 6 Metres; Phone Patch For Radio Amateurs, Pt.2.

March 1990: Delay Unit For Automatic Antennas; Workout Timer For Aerobics Classes; 16-Channel Mixing Desk, Pt.2; Using The UC3906 SLA Battery Charger IC.

April 1990: Dual Tracking ±50V Power Supply; Voice-Operated Switch With Delayed Audio; 16-Channel Mixing Desk, Pt.3; Active CW Filter.

June 1990: Multi-Sector Home Burglar Alarm; Build A Low-Noise Universal Stereo Preamplifier; Load Protector For Power Supplies.

July 1990: Digital Sine/Square Generator, Pt.1 (covers 0-500kHz); Burglar Alarm Keypad & Combination Lock; Build A Simple Electronic Die; A Low-Cost Dual Power Supply.

August 1990: High Stability UHF Remote Transmitter; Universal Safety Timer For Mains Appliances (9 Minutes); Horace The Electronic Cricket; Digital Sine/Square Generator, Pt.2.

September 1990: A Low-Cost 3-Digit Counter Module; Build A Simple Shortwave Converter For The 2-Metre Band; The Care & Feeding Of Nicad Battery Packs (Getting The Most From Nicad Batteries).

October 1990: The Dangers of PCBs; Low-Cost Siren For Burglar Alarms; Dimming Controls For The Discolight; Surfsound Simulator; DC Offset For DMMs; NE602 Converter Circuits.

November 1990: Connecting Two TV Sets To One VCR; Build An Egg Timer; Low-Cost Model Train Controller; 1.5V To 9V DC Converter; Introduction To Digital Electronics; A 6-Metre Amateur Transmitter.

January 1991: Fast Charger For Nicad Batteries, Pt.1; Have Fun With The *Fruit* Machine (Simple Poker Machine); Build A Two-Tone Alarm Module; The Dangers of Servicing Microwave Ovens.

March 1991: Transistor Beta Tester Mk.2; A Synthesised AM Stereo Tuner, Pt.2; Multi-Purpose I/O Board For PC-Compatibles; Universal Wideband RF Preamplifier For Amateur Radio & TV.

May 1991: 13.5V 25A Power Supply For Transceivers; Stereo Audio Expander; Fluorescent Light Simulator For Model Railways; How To Install Multiple TV Outlets, Pt.1.

July 1991: Loudspeaker Protector For Stereo Amplifiers; 4-Channel Lighting Desk, Pt.2; How To Install Multiple TV Outlets, Pt.2; Tuning In To Satellite TV, Pt.2.

September 1991: Digital Altimeter For Gliders & Ultralights; Ultrasonic Switch For Mains Appliances; The Basics Of A/D & D/A Conversion; Plotting The Course Of Thunderstorms.

October 1991: Build A Talking Voltmeter For Your PC, Pt.1; SteamSound Simulator For Model Railways Mk.II; Magnetic Field Strength Meter; Digital Altimeter For Gliders, Pt.2; Military Applications Of R/C Aircraft.

November 1991: Colour TV Pattern Generator, Pt.1; A Junkbox 2-Valve Receiver; Flashing Alarm Light For Cars; Digital Altimeter For Gliders, Pt.3; Build A Talking Voltmeter For Your PC, Pt.2.

December 1991: TV Transmitter For VCRs With UHF Modulators; Infrared Light Beam Relay; Colour TV Pattern Generator, Pt.2; Index To Volume 4.

March 1992: TV Transmitter For VHF VCRs; Thermostatic Switch For Car Radiator Fans; Coping With Damaged Computer Directories; Valve Substitution In Vintage Radios.

April 1992: IR Remote Control For Model Railroads; Differential Input Buffer For CROs; Understanding Computer Memory; Aligning Vintage Radio Receivers, Pt.1.

June 1992: Multi-Station Headset Intercom, Pt.1; Video Switcher For Camcorders & VCRs; IR Remote Control For Model Railroads, Pt.3; 15-Watt 12-24V Inverter; A Look At Hard Disk Drives.

October 1992: 2kW 24VDC - 240VAC Sinewave Inverter; Multi-Sector Home Burglar Alarm, Pt.2; Mini Amplifier For Personal Stereos, A Regulated Lead-Acid Battery Charger.

February 1993: Three Projects For Model Railroads; Low Fuel Indicator For Cars; Audio Level/VU Meter (LED Readout); An Electronic Cockroach; 2kW 24VDC To 240VAC Sinewave Inverter, Pt.5.

March 1993: Solar Charger For 12V Batteries; Alarm-Triggered Security Camera; Reaction Trainer; Audio Mixer for Camcorders; A 24-Hour Sidereal Clock For Astronomers.

April 1993: Solar-Powered Electric Fence; Audio Power Meter; Three-Function Home Weather Station; 12VDC To 70VDC Converter; Digital Clock With Battery Back-Up.

June 1993: AM Radio Trainer, Pt.1; Remote Control For The Woofer Stopper; Digital Voltmeter For Cars; Windows-Based Logic Analyser.

July 1993: Single Chip Message Recorder; Light Beam Relay Extender; AM Radio Trainer, Pt.2; Quiz Game Adjudicator; Windows-Based Logic Analyser, Pt.2; Antenna Tuners – Why They Are Useful.

August 1993: Low-Cost Colour Video Fader; 60-LED Brake Light Array; Microprocessor-Based Sidereal Clock; Satellites & Their Orbits.

September 1993: Automatic Nicad Battery Charger/Discharger; Stereo Preamplifier With IR Remote Control, Pt.1; In-Circuit Transistor Tester; +5V to ±15V DC Converter; Remote-Controlled Cockroach.

October 1993: Courtesy Light Switch-Off Timer For Cars; Wireless Microphone For Musicians; Stereo Preamplifier With IR Remote Control, Pt.2; Electronic Engine Management, Pt.1.

November 1993: High Efficiency Inverter For Fluorescent Tubes; Stereo Preamplifier With IR Remote Control, Pt.3; Siren Sound Generator; Engine Management, Pt.2; Experiments For Games Cards.

December 1993: Remote Controller For Garage Doors; Build A LED Stroboscope; Build A 25W Audio Amplifier Module; A 1-Chip Melody Generator; Engine Management, Pt.3; Index To Volume 6.

January 1994: 3A 40V Variable Power Supply; Solar Panel Switching Regulator; Printer Status Indicator; Mini Drill Speed Controller; Stepper Motor Controller; Active Filter Design; Engine Management, Pt.4.

February 1994: Build A 90-Second Message Recorder; 12-240VAC 200W Inverter; 0.5W Audio Amplifier; 3A 40V Adjustable Power Supply; Engine Management, Pt.5; Airbags In Cars – How They Work.

March 1994: Intelligent IR Remote Controller; 50W (LM3876) Audio Amplifier Module; Level Crossing Detector For Model Railways; Voice Activated Switch For FM Microphones; Engine Management, Pt.6.

April 1994: Sound & Lights For Model Railway Level Crossings; Discrete Dual Supply Voltage Regulator; Universal Stereo Preamplifier; Digital Water Tank Gauge; Engine Management, Pt.7.

May 1994: Fast Charger For Nicad Batteries; Induction Balance Metal Locator; Multi-Channel Infrared Remote Control; Dual Electronic Dice; Simple Servo Driver Circuits; Engine Management, Pt.8.

June 1994: 200W/250W Mosfet Amplifier Module; A Coolant Level Alarm For Your Car; 80-Metre AM/SSB Transmitter For Amateurs; Converting Phono Inputs To Line Inputs; PC-Based Nicad Battery Monitor; Engine Management, Pt.9.

July 1994: Build A 4-Bay Bow-Tie UHF TV Antenna; ProChamp 2-Transistor Preamplifier; Stereo Mini Whistle & Diesel Horn Simulator; 5V SLA Battery Charger; Electronic Engine Management, Pt.10.

August 1994: High-Power Dimmer For Incandescent Lights; Microprocessor-Controlled Morse Keyer; Dual Diversity Tuner For FM Microphones, Pt.1; Nicad Zapper (For Resurrecting Nicad Batteries); Electronic Engine Management, Pt.11.

September 1994: Automatic Discharger For Nicad Battery Packs; MiniVox Voice Operated Relay; Image Intensified Night Viewer; AM Radio For Weather Beacons; Dual Diversity Tuner For FM Microphones, Pt.2; Electronic Engine Management, Pt.12.

October 1994: How Dolby Surround Sound Works; Dual Rail Variable Power Supply; Build A Talking Headlight Reminder; Electronic Ballast For Fluorescent Lights; Electronic Engine Management, Pt.13.

November 1994: Dry Cell Battery Rejuvenator; Novel Alphanumeric Clock; 80-Metre DSB Amateur Transmitter; Twin-Cell Nicad Discharger (See May 1993); How To Plot Patterns Direct to PC Boards.

December 1994: Easy-To-Build Car Burglar Alarm; Three-Spot Low Distortion Sinewave Oscillator; Clifford – A Pesky Electronic Cricket; Remote Control System for Models, Pt.1; Index to Vol.7.

January 1995: Sun Tracker For Solar Panels; Battery Saver For Torches; Dolby Pro-Logic Surround Sound Decoder, Pt.2; Dual Channel UHF Remote Control; Stereo Microphone Preamplifier.

February 1995: 2 x 50W Stereo Amplifier Module; Digital Effects Unit For Musicians; 6-Channel Thermometer With LCD Readout; Wide Range Electrostatic Loudspeakers, Pt.1; Oil Change Timer For Cars; Remote Control System For Models, Pt.2.

March 1995: 2 x 50W Stereo Amplifier, Pt.1; Subcarrier Decoder For FM Receivers; Wide Range Electrostatic Loudspeakers, Pt.2; IR Illuminator For CCD Cameras; Remote Control System For Models, Pt.3.

April 1995: FM Radio Trainer, Pt.1; Photographic Timer For Darkrooms; Balanced Microphone Preamp. & Line Filter; 50W/Channel Stereo Amplifier, Pt.2; Wide Range Electrostatic Loudspeakers, Pt.3; 8-Channel Decoder For Radio Remote Control.

May 1995: Build A Guitar Headphone Amplifier; FM Radio Trainer, Pt.2; Transistor/Mosfet Tester For DMMs; A 16-Channel Decoder For Radio Remote Control; Introduction to Satellite TV.

June 1995: Build A Satellite TV Receiver; Train Detector For Model Railways; 1W Audio Amplifier Trainer; Low-Cost Video Security System; Multi-Channel Radio Control Transmitter For Models, Pt.1

July 1995: Electric Fence Controller; How To Run Two Trains On A Single Track (Incl. Lights & Sound); Setting Up A Satellite TV Ground Station; Build A Reliable Door Minder.

August 1995: Fuel Injector Monitor For Cars; Gain Controlled Microphone Preamp; Audio Lab PC-Controlled Test Instrument, Pt.1; How To Identify IDE Hard Disk Drive Parameters.

September 1995: Railpower Mk.2 Walkaround Throttle For Model Railways, Pt.1; Keypad Combination Lock; The Vader Voice; Jacob's Ladder Display; Audio Lab PC-Controlled Test Instrument, Pt.2.

October 1995: 3-Way Loudspeaker System; Railpower Mk.2 Walkaround Throttle For Model Railways, Pt.2; Build A Fast Charger For Nicad Batteries.

ORDER FORM

Please send the following back issues: _____

Enclosed is my cheque/money order for $_____or please debit my: ☐ Bankcard ☐ Visa Card ☐ Master Card

Card No. _____

Signature _____ Card expiry date_____ /_____

Name _____ Phone No (___) _____

PLEASE PRINT

Street _____

Suburb/town _____ Postcode _____

Note: prices include postage & packing

Australia ..... $A7.70 (incl. GST)

Overseas (airmail) $A10

Detach and mail to:
Silicon Chip Publications, PO Box 139, Collaroy, NSW, Australia 2097.
Or call (02) 9979 5644 & quote your credit card details or fax the details to (02) 9979 6503.
Email: silchip@siliconchip.com.au

10% OFF TO SUBSCRIBERS OR IF YOU BUY 10 OR MORE

November 1995: Miniature Display For Fuel Injected Cars; CB Transverter For The 80M Amateur Band, Pt.1; PIN Movement Detector.

December 1995: Engine Immobiliser; 5-Band Equaliser; CB Transverter For The 80M Amateur Band, Pt.2; Subwoofer Controller; Knock Sensing In Cars; Index To Volume 8.

January 1996: Surround Sound Mixer & Decoder, Pt.1; Magnetic Card Reader; Build An Automotive Computer Controller; IR Remote Control For The Railpower Mk.2; Recharging Nicad Batteries For Long Life.

April 1996: Cheap Battery Refills For Mobile Phones; 125W Audio Amplifier Module; Knock Indicator For Leaded Petrol Engines; Multi-Channel Radio Control Transmitter, Pt.1.

May 1996: Upgrading The CPU In Your PC; High Voltage Insulation Tester; Knightrider Bi-Directional LED Chaser; Simple Duplex intercom Using Fibre Optic Cable; Cathode Ray Oscilloscopes, Pt.3.

June 1996: BassBox CAD Loudspeaker Software Reviewed; Stereo Simulator (uses delay chip); Mini Light Chaser; Low Ohms Tester For Your DMM; Automatic 10A Battery Charger.

July 1996: Build A VGA Digital Oscilloscope, Pt.1; Remote Control Extender For VCRs; 2A SLA Battery Charger; 3-Band Parametric Equaliser; Single Channel Ni-Bat Data Logger.

August 1996: Introduction to IGBTs; Electronic Starter For Fluorescent Lamps; VGA Oscilloscope, Pt.2; 350W Amplifier Module; Masthead Amplifier For TV & FM; Cathode Ray Oscilloscopes, Pt.4.

September 1996: VGA Oscilloscope, Pt.3; IR Stereo Headphone Link, Pt.1; High Quality PA Loudspeaker System; 3-Band HF Amateur Radio Receiver; Cathode Ray Oscilloscopes, Pt.5.

October 1996: Send Video Signals Over Twisted Pair Cable; Power Control With A Light Dimmer; 600W DC-DC Converter For Car Hifi Systems, Pt.1; IR Stereo Headphone Link, Pt.2; Build A Multi-Media Sound System, Pt.1; Multi-Channel Radio Control Transmitter, Pt.8.

November 1996: 8-Channel Stereo Mixer, Pt.1; Low-Cost Fluorescent Light Inverter; Repairing Domestic Light Dimmers; Multi-Media Sound System, Pt.2; 600W DC-DC Converter For Car Hifi Systems, Pt.2.

December 1996: Active Filter Cleans Up Your CW Reception; A Fast Clock For Railway Modellers; Laser Pistol & Electronic Target; Build A Sound Level Meter; 8-Channel Stereo Mixer, Pt.2; Index To Vol.9.

January 1997: How To Network Your PC; Control Panel For Multiple Smoke Alarms, Pt.1; Build A Pink Noise Source; Computer Controlled Dual Power Supply, Pt.1; Digi-Temp Monitors Eight Temperatures.

February 1997: PC-Controlled Moving Message Display; Computer Controlled Dual Power Supply, Pt.2; Alert-A-Phone Loud Sounding Telephone Alarm; Control System For Garage Doors & Gates, Pt.2.

March 1997: Driving A Computer By Remote Control; Plastic Power PA Amplifier (175W); Signalling & Lighting For Model Railways; Build A Jumbo LED Clock; Cathode Ray Oscilloscopes, Pt.7.

April 1997: Simple Timer With No ICs; Digital Voltmeter For Cars; Loudspeaker Protector For Stereo Amplifiers; Model Train Controller; A Look At Signal Tracing; Pt.1; Cathode Ray Oscilloscopes, Pt.8.

May 1997: Neon Tube Modulator For Light Systems; Traffic Lights For A Model Intersection; The Spacewriter – It Writes Messages To Thin Air; A Look At Signal Tracing; Pt.2; Cathode Ray Oscilloscopes, Pt.9.

June 1997: PC-Controlled Thermometer/Thermostat; TV Pattern Generator, Pt.1: Audio/RF Signal Tracer; High-Current Speed Controller For 12V/24V Motors; Manual Control Circuit For Stepper Motors.

July 1997: Infrared Remote Volume Control; A Flexible Interface Card For PCs; Points Controller For Model Railways; Colour TV Pattern Generator, Pt.2: An In-Line Mixer For Radio Control Receivers.

August 1997: The Bass Barrel Subwoofer; 500 Watt Audio Power Amplifier Module; A TENs Unit For Pain Relief; Addressable PC Card For Stepper Motor Control; Automatic Gates For Your Home.

September 1997: Multi-Spark Capacitor Discharge Ignition; 500W Audio Power Amplifier, Pt.2; A Video Security System For Your Home; PC Card For Controlling Two Stepper Motors; HiFi On A Budget.

October 1997: Build A 5-Digit Tachometer; Add Central Locking To Your Car; PC-Controlled 4-Channel Voltmeter; 500W Audio Power Amplifier, Pt.3; Customising The Windows 95 Start Menu.

November 1997: Heavy Duty 10A 240VAC Motor Speed Controller; Easy-To-Use Cable & Wiring Tester; Build A Musical Doorbell; Replacing Foam Speaker Surrounds; Understanding Electric Lighting Pt.1.

December 1997: Speed Alarm For Cars; 2-Axis Robot With Gripper; Stepper Motor Driver With Onboard Buffer; Power Supply For Stepper Motor Cards; Understanding Electric Lighting Pt.2; Index To Vol.10.

January 1998: Build Your Own 4-Channel Lightshow, Pt.1 (runs off 12VDC or 12VAC); Computer Control System For Model Railways, Pt.1; Pan Controller For CCD Cameras.

February 1998: Multi-Purpose Fast Battery Charger, Pt.1; Telephone Exchange Simulator For Testing; Command Control System For Model Railways, Pt.2; Build Your Own 4-Channel Lightshow, Pt.2.

April 1998: Automatic Garage Door Opener, Pt.1; 40V 8A Adjustable Power Supply, Pt.1; PC-Controlled 0-30kHz Sinewave Generator; Build A Laser Light Show; Understanding Electric Lighting; Pt.6.

May 1998: Troubleshooting Your PC, Pt.1; Build A 3-LED Logic Probe; Automatic Garage Door Opener, Pt.2; Command Control For Model Railways, Pt.4; 40V 8A Adjustable Power Supply, Pt.2.

June 1998: Troubleshooting Your PC, Pt.2; Universal High Energy Ignition System; The Roadies' Roadies Reach Fame; Universal Stepper Motor Controller; Command Control For Model Railways, Pt.5.

July 1998: Troubleshooting Your PC, Pt.3; 15-W/Ch Class-A Audio Amplifier, Pt.1; Simple Charger For 6V & 12V SLA Batteries; Automatic Semiconductor Analyser; Understanding Electric Lighting, Pt.8.

August 1998: Troubleshooting Your PC, Pt.4 (Adding Extra Memory); Simple I/O Card With Automatic Data Logging; Build A Beat Triggered Strobe; 15-W/Ch Class-A Stereo Amplifier, Pt.2.

September 1998: Troubleshooting Your PC, Pt.5: A Blocked Air-Filter Alarm; Wax-Wax Touch Switch; Battery Desulfator; Gear Change Indicator For Cars; Capacity Indicator For Rechargeable Batteries.

October 1998: Lab Quality AC Millivoltmeter, Pt.1; PC-Controlled Stress-O-Meter; Versatile Electronic Guitar Limiter; 12V Trickle Charger For Float Conditions; Adding Extra Memory Sockets To Your Fastboot.

November 1998: The Christmas Star; A Turbo Timer For Cars; Build A Poker Machine, Pt.1; FM Transmitter For Musicians; Lab Quality AC Millivoltmeter, Pt.2; Improving AM Radio Reception, Pt.1.

December 1998: Engine Immobiliser Mk.2; Thermocouple Adaptor For DMMs; Regulated 12V DC Plugpack; Build A Poker Machine, Pt.2; Improving AM Radio Reception, Pt.2; Mixer Module For F3B Gliders.

January 1999: High-Voltage Megohm Tester; Getting Started With BASIC Stamp; LED Bargraph Ammeter For Cars; Keypad Engine Immobiliser; Improving AM Radio Reception, Pt.3.

March 1999: Getting Started With Linux, Pt.1; Build A Digital Anemometer; Simple DIY PIC Programmer; Easy-To-Build Audio Compressor; Low Distortion Audio Signal Generator, Pt.2.

April 1999: Getting Started With Linux, Pt.2; High-Power Electric Fence Controller; Bass Cube Subwoofer; Programmable Thermostat/Thermometer; Build An Infrared Sentry; Rev Limiter For Cars.

May 1999: The Line Dancer Robot; An X-Y Table With Stepper Motor Control, Pt.1; Three Electric Fence Testers; Heart Of LEDs; Build A Carbon Monoxide Alarm; Getting Started With Linux, Pt.3.

June 1999: FM Radio Tuner Card For PCs; X-Y Table With Stepper Motor Control, Pt.2; Programmable Ignition Timing Module For Cars, Pt.1; Hard Disk Drive Upgrades Without Reinstalling Software?

July 1999: Build A Dog Silencer; 10-Watt Into 19.99mH Inductance Meter; Build An Audio-Video Transmitter; Programmable Ignition Timing Module For Cars, Pt.2; XYZ Table With Stepper Motor Control, Pt.3.

August 1999: Remote Modem Controller; Daytime Running Lights For Cars; Build A PC Monitor Checker; Switching Temperature Controller; X-Y Table With Stepper Motor Control, Pt.4; Video Lighting, Pt.1.

September 1999: Autonomouse The Robot, Pt.1; Voice Direct Speech Recognition Module; Digital Electrolytic Capacitance Meter; XYZ Table With Stepper Motor Control, Pt.5; Peltier-Powered Can Cooler.

October 1999: Build The Railpower Model Train Controller, Pt.1; Semiconductor Curve Tracer; Autonomouse The Robot, Pt.2; XYZ Table With Stepper Motor Control, Pt.6; Introducing Home Theatre.

November 1999: Setting Up An Email Server; Speed Alarm For Cars, Pt.1; LED Christmas Tree; Intercom Station Expander; Foldback Loudspeaker System; Railpower Model Train Controller, Pt.2.

December 1999: Solar Panel Regulator; PC Powerhouse (gives +12V, +9V, +6V & +5V rails); Fortune Finder Metal Locator; Speed Alarm For Cars, Pt.2; Railpower Model Train Controller, Pt.3; Index To Vol.12.

January 2000: Spring Reverberation Module; An Audio-Video Test Generator; Build The Picmite Programmer; Power A Parallel Port Interface Card; Off-Hook Indicator For Telephone Lines.

February 2000: Multi-Sector Sprinkler Controller; A Digital Voltmeter For Your Car; An Ultrasonic Parking Radar; Build A Safety Switch Checker; Build A Sine/Square Wave Oscillator.

March 2000: Resurrecting An Old Computer; Low Distortion 100W Amplifier Module, Pt.1; Electronic Wind Vane With 16-LED Display; Glowplug Driver For Powered Models; The OzTrip Car Computer, Pt.1.

May 2000: Ultra-LD Stereo Amplifier, Pt.2; Build A LED Dice (With PIC Microcontroller); Low-Cost AT Keyboard Translator (Converts IBM Scan-Codes To ASCII); 50A Motor Speed Controller For Models.

June 2000: Automatic Rain Gauge With Digital Readout; Parallel Port VHF FM Receiver; LI'l Powerhouse Switchmode Power Supply (1.23V to 40V) Pt.1; CD Compressor For Cars Or The Home.

July 2000: A Moving Message Display; Compact Fluorescent Lamp Driver; El-Cheapo Musicians' Lead Tester; LI'l Powerhouse Switchmode Power Supply (1.23V to 40V) Pt.2.

August 2000: Build A Theremin For Really Eerie Sounds; Come in Spinner (writes messages in the air); Powerbrick Switch For 240VAC Lamps; Structured Cabling For Computer Networks.

September 2000: Build A Swimming Pool Alarm; An 8-Channel PC Relay Board; Fuel Mixture Display For Cars, Pt.1; Protoboards – The Easy Way Into Electronics, Pt.1; Oybug The Solar Fly.

October 2000: Guitar Jammer For Practice & Jam Sessions; Booze Buster Breath Tester; A Wand-Mounted Inspection Camera; Installing A Free-Air Subwoofer In Your Car; Fuel Mixture Display For Cars, Pt.2.

November 2000: Santa & Rudolf Christie Display; 2-Channel Guitar Preamplifier, Pt.1; Message Bank & Missed Call Alert; Electronic Thermostat; Protoboards – The Easy Way Into Electronics, Pt.3.

December 2000: Home Networking For Shared Internet Access; Build A Bright-White LED Torch; 2-Channel Guitar Preamplifier, Pt.2 (Digital Reverb); Driving An LCD From The Parallel Port; Build A Morse Clock; Protoboards – The Easy Way into Electronics, Pt.4; Index To Vol.13.

January 2001: How To Transfer LPs & Tapes To CD; The LP Doctor – Clean Up Clicks & Pops, Pt.1; Arbitrary Waveform Generator; 2-Channel Guitar Preamplifier, Pt.3; PIC Programmer & TestBed.

February 2001: How To Observe Meteors Using Junked Gear; An Easy Way To Make PC Boards; LI'l Pulser Train Controller; Midi-Mate – A MIDI Interface For PCs; Build The Bass Blazer; Interactive Groundplane Antenna; The LP Doctor – Clean Up Clicks & Pops, Pt.2.

March 2001: Making Photo Resist PC Boards; Digi-Pulse 12/24 Hour Clock; Parallel Port PIC Programmer & Checkerboard Protoboards; The Way Into Electronics, Pt.5; A Simple MIDI Expansion Box.

April 2001: A GPS Module For Your PC; Dr Video – An Easy-To-Build Video Stabiliser; Tremolo Unit For Musicians; Minimitter FM Stereo Transmitter; Intelligent Wizard Battery Charger.

May 2001: Powerful 12V Mini Stereo Amplifier; Two White-LED Torches To Build; Powerflex – A Multi-Voltage Power Supply; Using Linux To Share An Internet Connection, Pt.1; Tweaking Windows With TweakUI.

June 2001: Fast Universal Battery Charger, Pt.1; Phonnne – Call, Listen In & Switch Devices On & Off; LI'l Shlooper – A Low-Cost Automatic Camera Switcher; Using Linux To Share An Internet Connection, Pt.2; A PC To Die For, Pt.1 (Building Your Own PC).

July 2001: The HeartMate Heart Rate Monitor; Do Not Disturb Telephone Function; Cars – A Simple Alarm Clock; Fast Universal Battery Charger, Pt.2; A PC To Die For, Pt.2; Backing Up Your Email.

August 2001: Direct Injection Box For Musicians; Build A 200W Mosfet Amplifier Module; Headlight Reminder For Cars; 40MHz 6-Digit Frequency Counter; A PC To Die For, Pt.3; Using Linux To Share An Internet Connection, Pt.3.

September 2001: Making MP3s – Rippers & Encoders; Build Your Own MP3 Jukebox, Pt.1; PC-Controlled Mains Switch; Personal Noise Source For Hi-Fi Systems; The Scope! Scooper Digital Oscilloscope Microphone; Using Linux To Share An Internet Connection, Pt.4.

October 2001: A Video Microscope From Scrounged Parts; Build Your Own MP3 Jukebox, Pt.2; Super-Sensitive Body Detector; An Automotive Thermometer; Programming Adapter For Atmel Microcontrollers.

November 2001: Ultra-LD 100W RMS/Channel Stereo Amplifier, Pt.1; Neon Tube Modulator For Cars; Low-Cost Audio/Video Distribution Amplifier; Short Message Recorder Player; Computer Tips.

December 2001: A Look At Windows XP; Build A PC Infrared Transceiver; Ultra-LD 100W RMS/Ch Stereo Amplifier, Pt.2; Body Lights – An Intriguing Colour Display; PIC Fun – Learning About Micros.

January 2002: Touch And/Or Remote-Controlled Light Dimmer, Pt.1; A Cheap 'n' Easy Motorbike Alarm; 100W RMS/Channel Stereo Amplifier, Pt.3; Build A Raucous Alarm; Tracking Down Computer Software Problems; Electric Power Steering; FAQs On The MP3 Jukebox.

February 2002: 10-Channel IR Remote Control Receiver; 2.4GHz High-Power Audio/Video Link; Assemble Your Own 2-Way Tower Speakers; Touch And/Or Remote-Controlled Light Dimmer; PC Boosting A PC Without A Keyboard; 4-Way Event Timer.

March 2002: Mighty Midget Audio Amplifier Module; The Itsy-Bitsy USB Lamp; 6-Channel IR Remote Volume Control, Pt.1; RIAA Preamplifier For Magnetic Cartridges; 12/24V Intelligent Solar Power Battery Charger; Generate Audio Tones Using Your PC's Soundcard.

April 2002: How To Get Into Avionics; Automatic Single-Channel Light Dimmer; Pt.1 Build A Water Level Indicator; Multi-Output Bench Power Supply; Versatile Multi-Mode Timer; 6-Channel IR Remote Volume Control, Pt.2; More FAQ's On The MP3s Jukebox Player.

May 2002: PIC-Controlled 32-LED Knightrider; The Battery Guardian (Cuts Power When Battery Voltage Drops); A Stereo Headphone Amplifier; Automatic Single-Channel Light Dimmer; Pt.2; Stepper Motor Controller; Share Shield – Keeping The Man-Eaters At Bay.

June 2002: Lock Out The Bad Guys with A Firewall; Remote Volume Control For Stereo Amplifiers; The "Matchless" Metal Locator; Compact 0-80A Automotive Ammeter; Constant High-Current Source.

July 2002: Telephone Headset Adaptor; Rolling Code 4-Channel UHF Remote Control; Remote Volume Control For The Ultra-LD Stereo Amplifier; Direct Conversion Receiver For Radio Amateurs, Pt.1.

August 2002: Digital Instrumentation Software For Your PC; Digital Storage Logic Probe; Digital Thermometer/Thermostat; Sound Card Interface For PC Test Instruments; Direct Conversion Receiver For Radio Amateurs, Pt.2; Spruce Up Your PC With XP-Style Icons.

September 2002: 12V Fluorescent Lamp Inverter; 8-Channel Infrared Remote Control; 50-Watt DC Electronic Load; Driving Light & Accessory Delay; Direct Conversion Receiver For Radio Amateurs, Pt.3; Updates.

October 2002: Speed Controller For Universal Motors; PC Parallel Port Wizard; "Whistle & Point" Cable Tracer; Build An AVR ISP Serial Programmer; Watch 3D TV In Your Own Home.

PLEASE NOTE: Issues not listed are now sold out. All other issues are presently in stock. We can supply photostat copies (or tear sheets) from sold-out issues for $7.70 per article (includes p&p). When supplying photostat articles or back copies, we automatically supply any relevant notes & errata at no extra charge. A complete index to all articles published to date can be downloaded free from our web site: **www.siliconchip.com.au**

MARKET CENTRE

Cash in your surplus gear. Advertise it here in Silicon Chip.

CLASSIFIED ADVERTISING RATES

Advertising rates for this page: Classified ads: $20.00 (incl. GST) for up to 20 words plus 66 cents for each additional word. Display ads: $33.00 (incl. GST) per column centimetre (max. 10cm). Closing date: five weeks prior to month of sale.

To run your classified ad, print it clearly in the space below or on a separate sheet of paper, fill out the form & send it with your cheque or credit card details to: Silicon Chip Classifieds, PO Box 139, Collaroy, NSW 2097. Or fax the details to (02) 9979 6503.

Taxation Invoice ABN 49 003 205 490

Enclosed is my cheque/money order for $_____ or please debit my

☐ Bankcard ☐ Visa Card ☐ Master Card

Card No. | | | | | | | | | | | | | | | | |

Signature_____ Card expiry date_____/_____

Name _____

Street _____

Suburb/town _____ Postcode_____

FOR SALE

UNIVERSAL DEVICE PROGRAMMER: Low cost, high performance, 48-pin, works in DOS or Windows incl. NT/2000. $1364. Universal EPROM programmer $467.50. Also adaptors, (E)EPROM, PIC, 8051 programmers, EPROM simulator and eraser.
Dunfield C Compilers: Everything you need to develop C and ASM software for 68HC08, 6809, 68HC11, 68HC12, 68HC16, 8051/52, 8080/85, 8086, 8096 or AVR: $198 each. Demo disk available.
ImageCraft C Compilers: 32-bit Windows IDE and compiler. For AVR, 68HC-08, 68HC11, 68HC12, 68HC16. $385.00
Atmel Flash CPU Programmer: Handles the 89Cx051, 89C5x, 89Sxx in both DIP and PLCC44 and some AVR's, most 8-pin EEPROMS. Includes socket for serial ISP cable. $220, $11 p&p. SOIC adaptors: 20 pin $132.00, 14 pin $126.50, 8 pin $121.00.
Full details on web site. Credit cards accepted.
GRANTRONICS PTY LTD, PO Box 275, Wentworthville 2145. (02) 9896 7150 or http://www.grantronics.com.au

COMPUTER ACCESSORIES at market prices. Cables, screws, fans, mice and 100s more. Ask for my price list. **SURPLUS COMPUTER PRODUCTS**, PO Box 220, SEBASTOPOL VIC 3356. Ph (03) 5336 2296 or email: **tmcleod@ncable.net.au**

A NEW RANGE of European kits made by **SMART KIT** now available in Australia at **www.q-mex.com.au**

RCS HAS MOVED to 41 Arlewis St, Chester Hill 2162 and is now open, with full production. Tel (02) 9738 0330; Fax 9738 0334. rcsradio@cia.com.au www.cia.com.au/rcsradio

WEATHER STATIONS: Windspeed & direction, inside temperature, outside temperature & windchill. Records highs & lows with time and date as they occur. Optional rainfall and PC interface. Used by Government Departments, farmers,

Stuck in a dead end job? Prospects looking grim?

Well Altronics are looking for some bright electronic enthusiasts to fill positions in their Sydney and Melbourne sales offices. You will need a passion for electronics and a youthful, energetic outlook to life. For more information or to register your interest, phone:
Sydney: Peter Deeb
(02) 9648 0088
Melbourne: Paul Zervaas
(03) 9574 6211

ALTRONIC DISTRIBUTORS pty. ltd.

TAIG MACHINERY
Micro Mini Lathes and Mills
From $489.00

59 Gilmore Crescent *(02) 6281 5660*
Garran ACT 2605 *0412269707*

D.I.Y PCB SUPPLIES
For price list, write Acetronics
5/32 Seton Rd, Moorebank 2170 or email
acetronics@acetronics.com.au
Phone (02) 9600 6832
www.acetronics.com.au

Need prototype PC boards?
We have the solutions – we print electronics!
Four-day turnaround, less if urgent; Artwork from your own positive or file; Through hole plating; Prompt postal service; 29 years technical experience; Inexpensive; Superb quality.
Printed Electronics, 12A Aristoc Rd, Glen Waverley, Vic 3150.
Phone: (03) 9545 3722; Fax: (03) 9545 3561
Call Mike Lynch and check us out!
We are the best for low cost, small runs.

pilots, and weather enthusiasts. Other models with barometric pressure, humidity, dew point, solar radiation, UV, leaf wetness, etc. Just phone, fax or write for our FREE catalogue and price list. Eco Watch phone: (03) 9761 7040; fax: (03) 9761 7050; Unit 5, 17 Southfork Drive, Kilsyth, Vic. 3137. ABN 63 006 399 480.

Audio, Video, S-Video and VGA cables distribution amps, switchers, adaptors, price lists at:
www.questronix.com.au

USB KITS: DTMF Transceiver, Thermometer, DDS HF Generator, Compass, 4 Channel Voltmeter, I/O Relay Card. Also Digital Oscilloscope and Temperature Loggers. **www.ar.com.au/~softmark**

TELEPHONE EXCHANGE SIMULATOR: test equipment without the cost of telephone lines. Melb 9806 0110. **http://www.alphalink.com.au/~zenere**

PCBs MADE, ONE OR MANY. Low prices, hobbyists welcome. Sesame Electronics (02) 9586 4771. sesame777@optusnet.com.au; **http://members.tripod.com/~sesame_elec**

continued on page 96

New New New
Silvertone **Mark22-SM**
Slimline Mini FM R/C Receiver

- 6 Channels
- 10kHz frequency separation
- Size: 55 x 23 x 20mm
- Weight: 25gm
- Modular Construction

Price: $A129.50 with crystal
Silvertone **Electronics**
PO Box 580, Riverwood, NSW 2210.
Ph/Fax (02) 9533 3517
email: youngbob@silvertone.com.au
Website:www.silvertone.com.au

Printed Circuit Board Manufacture
48-Hour service • High quality • Low prices
1 offs to any quantity
Artwork design if required
Call for obligation free quote...
INSTANT PCBs, POBox 448, Avalon 2107
Ph (02)9974 1189 Fax (02)9974 5491

Circuit Ideas Wanted

Do you have a good circuit idea? If so, sketch it out, write a brief description of its operation & send it to us. Provided your idea is workable & original, we'll publish it in Circuit Notebook & you'll make some money. We pay up to $60 for a good circuit so send your idea to:
Silicon Chip Publications,
PO Box 139, Collaroy, NSW 2097.

Silicon Chip Binders

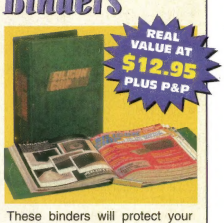

These binders will protect your copies of SILICON CHIP. They feature heavy-board covers & are made from a distinctive 2-tone green vinyl. They hold up to 14 issues & will look great on your bookshelf.

★ 80mm internal width

★ SILICON CHIP logo printed in gold-coloured lettering on spine & cover

★ Buy five and get them postage free!

Price: $A12.95 plus $A5.50 p&p.
Available only in Australia.

Silicon Chip Publications
PO Box 139
Collaroy Beach 2097

Or fax (02) 9979 6503; or ring (02) 9979 5644 & quote your credit card number.

Use this handy form

Enclosed is my cheque/money order for
$_____ or please debit my
☐ Bankcard ☐ Visa ☐ Mastercard
Card No:
_____
Card Expiry Date ____/____
Signature _____
Name _____
Address _____
_____ P/code_____

Professional A/V Accessories

- Variety of A/V selectors
- Hard-to-find A/V cables
- Video-editing
- VHS/Photos to DVD
- Notebook computers
- Computer peripherals
- Best value on Home Theatre

Alltac International P/L, Suite 230, 813 Pacific Hwy, Chatswood, NSW 2067.

Phone: 9411 3088 Fax: 9412 1855

www.alltac.com.au

Satellite TV Reception

International satellite TV reception in your home is now affordable. Send for your free info pack containing equipment catalog, satellite lists, etc or call for appointment to view. We can display all satellites from 76.5° to 180°.

AV-COMM P/L, 24/9 Powells Rd, Brookvale, NSW 2100.
Tel: 02 9939 4377 or 9939 4378.
Fax: 9939 4376; www.avcomm.com.au

Positions At Jaycar

We are often looking for enthusiastic staff for positions in our retail stores and head office at Silverwater in Sydney. A genuine interest in electronics is a necessity. Phone 02 9741 8555 for current vacancies.

Advertising Index

Alltac International 96
Acetronics 95
Altronics ..... loose insert
Av-Comm Pty Ltd 96
Clarke & Severn 31
Dick Smith Electronics 18-21
Elan Audio 83
Evatco 83
Grantronics 94
Harbuch Electronics 55
Instant PCBs 95
Hy-Q International 31
Jaycar 45-52,96
JED Microprocessors 9,31
MicroByte Electronics 31
Microgram Computers 3
MicroZed Computers 31
Oatley Electronics ..... IBC
Printed Electronics 95
Procon Technology 31
Procopy 31
Quest Electronics 89
RCS Radio 79,95
RF Probes 55
Silicon Chip Back Issues 92-93
Silicon Chip Binders ..... OBC
Silicon Chip Bookshop 32-33
Silicon Chip TestBench ..... IFC
Silvertone Electronics 31,95
Soundlabs Group 31
Taig Machinery 95
Telelink Communications 31
Wiltronics 31

Classifieds: continued from p.95

LABJACK USB DATA ACQUISITION MODULE features 8 12bit analog inputs, 20 digital I/O, 2 analog outputs and high speed counter. Free software and ActiveX component. **DAS005 Parallel Port Data Acquisition Module** features 8 12bit Analog inputs, 4 digital I/Ps & 4 digital O/Ps. Free windows software. **FAB Programmable Logic Controllers**. Low cost, high performance. Programming software and SCADA software free. Heaps of features. Full details and credit card ordering available at:
www.oceancontrols.com.au

KITS KITS AND MORE KITS! Check 'em out at **www.ozitronics.com**

KIT ASSEMBLY

NEVILLE WALKER KIT ASSEMBLY & REPAIR:

- Australia wide service
- Small production runs
- Specialist "one-off" applications

Phone Neville Walker (07) 3857 2752
Email: flashdog@optusnet.com.au

KIT ASSEMBLY & REPAIR. Small production or one off. Phone Robin Frost 08 8357 4441.
Email: **patrob@bigpond.com.au**

NOW AVAILABLE FROM

SILICON CHIP
www.siliconchip.com.au

Electronics Australia

Project Reprints – Limited Back Issues –Limited One-Shots

If you're looking for a project from Electronics Australia, you'll find it at Silicon Chip! We can now offer reprints of all projects which have appeared in Electronics Australia, EAT, Electronics Today, ETI or Radio, TV & Hobbies. First search the EA website indexes for the project you want and then call, fax or email us with the details and your credit card details. Reprint cost is $8.80 per article (ie, 2-part projects cost $17.60). SILICON CHIP subscribers receive a 10% discount. We also have limited numbers of EA back issues and special publications. Call for details!

visit *www.siliconchip.com.au* or *www.electronicsaustralia.com.au*

PC Boards

Printed circuit boards for SILICON CHIP projects are made by:
RCS Radio Pty Ltd. Phone (02) 9738 0330. Fax (02) 9738 0334.

LOTS OF AMAZING OPTICAL BARGAINS
HIGH POWERED LED'S, LASERS POINTERS & LASER DIODES

AMAZINGLY BRIGHT MINI KEY-CHAIN LED TORCHES, ALL ARE AROUND 8 TO 10 Cd.

WHITE ...$7 RED ...$4
YELLOW ...$4 BLUE ...$6
GREEN ...$6

YOU HAVE HEARD OF SUPER BRIGHT LED's?... THESE ARE THE NEXT GENERATION LED?

All of the following are 8 to 10cD, 20mA max and narrow angle.

10cD White...$2.50 ea or if you like 10000mcD for 250c ea
Red...80c Yellow ...70c
Green...$2.10 Blue...$2.20
UV LED's ..$1.60
Less 10% for 10 or more of any mix

Money Detector Pens

These use a very bright UV LED. Check Australian currency for counterfeits by looking at the hidden UV printing on them. ...$4.50

Extra AG13 batteries ...15c as used in the key-chains, 3 req.
Extra AG3 batteries...6c as used in the pens, 4 req.

NEW (5mW@650nM) LASER MODULE

with adjustable focus
$4 or 3 for $10
(LM1)

Dont for get our bargain OPTO PACK...K147
Pack inc. total of 103 opto semiconductors. 91 various colours & types of visible LED's, 1 x IR LED, 6 x Photo-transistors, 2 x high speed PIN photodiodes, 1 x HC312 IR Receiver Module. KIT PRICE: (K147) $10 each pack

Series IV 4 CHANNEL UHF RECEIVER KIT:
This RX kit controls 4 high current contact rating relays in any mix of toggling or momentary. Uses a pre-built & pre-aligned 433MHz UHF (crystal locked) code hopping RX module. This RX module can learn up to 16 transmitters. 12V DC operation. RX kit incs. PCB & all on-board components

(K160) $34

Series IV 4 CHANNEL UHF TRANSMITTER KIT:
The TX Uses a pre-built & pre-aligned 433MHz UHF code hopping transmitter module, battery (supplied). TX kit inc. TX module, bat. clips, 12V bat. & key-fob : (TX4) $25

SOOPER SNOOPER

PARRABOLIC MICROPHONE/ STETHOSCOPE
This amazing parabolic microphone can listen in on all sorts of things from a distance, like bird calls and wildlife sounds, etc. Or by attaching the microphone to a metal rod or screwdriver handle it can be used to listen to white Ants chewing on your house! It is also ideal for detecting engine knocks and worn bearings etc. We even heard water rushing through a radiator hose! Kit inc. PCB, all onboard components, stethoscope pickup, electret Microphone.
KIT (K175) $22...
300mm Aluminium Parabolic Dish: (K175D) $18...
Suitable small plastic Case: (HB1) $2.50...
Power switch: $2.50... Long Screwdriver with Solid plastic Handle: $1

SPECIAL SOLAR FURNACE / PARABOLIC REFLECTOR
This is the same 300mm dish used in our Sooper Snooper. It is mill finished ie. unprotected aluminum & is reflective enough to ignite paper almost instantly. Some automotive cutting compound / polish it could make it highly reflective:$18 ea.

NEW 2km SUPER 433MHz UHF TRANSMITTER & RECEIVER SETS

We have not seen legal 433MHz transmitters with this much range before. PRE-BUILT UHF RX's & TX's These 433 transmitter and receiver sets are pre-tuned for maximum performance and have a range of up to 1.8K. They would be ideal for remote control of machinery, electronic equipment etc. Simple to connect to other projects etc with just 3 connections each, transmitter 12VDC + ground and signal... receiver 5VDC + ground, and signal, 190mm long and housed in plastic case with built in antenna. They could easily be made weather-proof.(uhf433) $55 pair

$120

(NEW) OMNI ELITE 900MHz CORDLESS PHONES (CT910) UP TO 1 KM RANGE
These are new items.
Features include high security.
Ask for a free caller ID unit with the above phone.

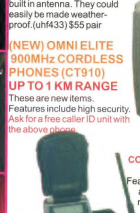

$139

OMNI ELITE 2.4GHz CORDLESS FLIP PHONE
These are new items. Features inc.. 40 channels, auto answer, 10 number memory, handset, 2 way digital security code, out of range indicator & much more. Comes with power adaptor & handset battery. Ask for a free caller ID unit with this phone. (CT2500)
Ask for a free caller ID unit with the above phone.

SUPER SPECIAL

12V / 7AH SEALED LEAD ACID BATTERY:
We are overstocked on these fresh stock batteries so now is the time to pick up a real bargain, 2.6kg, 150 x 65 x 92mm. Freight to most Australian destinations will not exceed $7 regardless of the Qty. ordered: (PB6) $25 each

"LOOK NEW KIT" STEREO FM TRANSMITTER KIT

This professionally designed stereo transmitter uses a special IC that produces the MPX signal only plus a stable transmitter that uses discrete components:22.50 for a complete kit inc. case. Avail. late NOV. (A094b)

"LOOK" RARE FIND

Triple Gang tuning capacitor
Size 58(L) (plus 12 X 6.25 mm shaft) X 38(W) X 41(D)
High quality, precision made with ball bearing shaft. $6 (CV1)

Quality Component

NEW E-Mail address

We have introduced a new Oatley E-Mail address... techo@oatleyelectronics.com
This address is for technical enquires only & our regular sales@oatleyelectronics.com address is now for sales enquiries only.

OATLEY ELECTRONICS Suppliers of kits and surplus electronics to hobbyists, experimenters, industry & professionals.
www.oatleyelectronics.com Orders: Ph (02) 9584 3563, Fax 9584 3561, sales@oatleyelectronics.com, PO Box 89 Oatley NSW 2223

major cards with ph. & fax orders, Post & Pack typically $7 Prices subject to change without notice ACN 068 740 081 ABN18068 740 081

SC_NOV_02

There IS a better way...

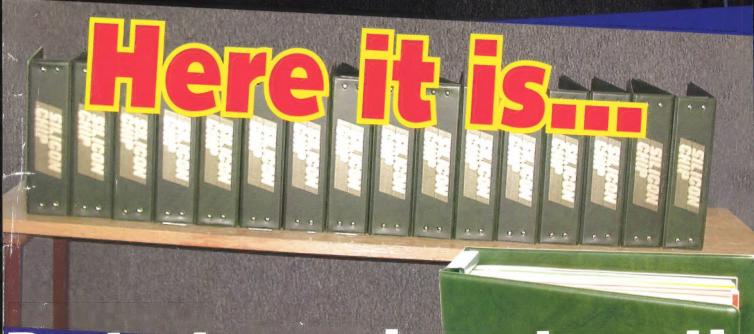

Here it is...

Protect your investment!

Your SILICON CHIP collection grows into a valuable reference library over the years. Protect that investment with a set of attractive, made-to-measure SILICON CHIP binders. You'll never have to hunt for that missing issue again. Each binder holds a full year of magazines, safe and secure. They're easy to insert - and if you need to, easy to remove.

Available now direct from

SILICON CHIP

Tel (02) 9979 5644
Fax (02) 9979 6503
email:
silchip@siliconchip.com.au

$12.95 ea
+ $5.50 p&p

Order 5 or more and they're p&p free!